Elenberg CTV-1540, Elenberg CTV-2065

LCD TV SERVICE MANUAL

Model list

KLC-TM1508

KLC-TM2018

KONKA GROUP CO,LTD.

Digital Flat Display Division

IMPORTANT SERVICE SAFETY INFORMATION

Operating the receiver outside of its cabinet or with its back removed involves a shock hazard. Work on these models should only be performed by those who are thoroughly familiar with precautions necessary when working on high voltage equipment.

Exercise care when servicing this chassis with power applied. if carelessly contacted, can cause serious shock or result in damage to the chassis. Maintain interconnecting ground lead connections between chassis, escutcheon, picture tube dag and tuner when operating chassis.

When it is necessary to make measurements or tests with AC power applied to the receiver chassis, an Isolation Transformer must be used as a safety precaution and to prevent possible damage to transistors. The Isolation Transformer should be connected between the TV line cord plug and the AC power outlet.

It is important to maintain specified values of all components and anywhere else in the received that could cause a rise in operating supply voltages. No changes should be made to the original design of the receiver.

Components shown in the shaded areas on the schematic diagram and/or identified by in the replacement parts list should be replaced only with exact factory recommended replacement parts. The use of unauthorized substitute parts man creates may create shock, fire, or other hazards.

Before returning the receiver to the user, perform the following safety checks:

1. Inspect all lead dress to make certain that leads are not pinched or that hardware is not lodged between the chassis and other metal parts in the receiver.
2. Replace all protective devices such as non-metallic control knobs, insulating fish papers, cabinet backs, adjustment and compartment covers of shields, isolation resistor-capacitor networks, mechanical insulators etc.
3. To be sure that not shock hazard exists, a check for the presence of leakage current should be made at each exposed metal part having a return path to the chassis (antenna, cabinet metal, screw heads knobs and/or shafts, escutcheon, etc.) in the following manner.

Plug the AC line cord directly into a 110V/220V/240V, AC receptacle. (Do not use an Isolation Transformer during these checks.) All checks must be repeated with the AC line cord plug connection reversed. (If necessary, a non-polarized adapter plug must be used only for the purpose of completing these checks.)

PLEASE READ BEFORE ATTEMPTING SERVICE

1. Use an Isolation Transformer when performing any service on this chassis.
2. Never disconnect any leads while receiver is in operation.
3. Disconnect all power before attempting any repairs.
4. Do not short any position of the circuit while the power is on.
5. For safety reasons, replace components any with identical replacement parts (SEE PARTS LIST).
6. Before alignment, warm up the TV for at least 30 minutes.
7. When removing a PCB or related component, after unfastening or changing a wire, be sure to put the wire back in its original position.
8. Inferior silicon grease can damage IC's and transistors. When replacing IC's and transistors, use only specified silicon grease. Remove all old silicon when applying new silicon.

9. Before removing the anode cap, discharge eletricity because it contains high voltage.

A. SPECIFICATION

System : Colour System:PAL,SECAM
Sound System:DK/BG/I/M
Audio output power 10%THD 1W X 2（KLC-TM1508）
10%THD 2W X 2（KLC-TM2018）
Antenna Impedance 75Ω(Unbalance)
Power Consumption 48W（KLC-TM1508）
60W（KLC-TM2018）
Power Supply : AC~100-240V,50/60Hz (Adapter)-----KLC-TM1508
DC12V 4A（TV）----------KLC-TM1508
AC~100-240V,50/60Hz（TV） -------KLC-TM2018

item	Port list KLC-TM1508
1	RF cable
2	Video and Audio
3	S-Video
4	Headphone audio output
5	VGA
5	DC 12V input

item	Port list KLC-TM2018
1	RF cable
2	Y Pb /Cb Pr /Cr
3	Audio2(Y、Pb/Cb、Pr/Cr and PC Audio input)
4	VGA
6	Video and Audio1
7	S-Video
8	Headphone audio output
9	AC Power input

1.Preface

1.1 Applicable area

This test manual is applicable for KLC-TM1508.

1.2 Test notes

1.2.1 Please follow the pointed test steps and choose the proper test equipment to conduct adjustment, otherwise good effect of TV set could not be obtained. Pointed bias voltage value should be ensured during test to get satisfied test result.

1.2.2 Be sure that you have the static electricity –protective glove in before test.

2 Test environment

1）Temperature：15~35°C

2）Relative humidity 45 ~ 75%

3）Air pressure: 86 ~ 106kPa

3 Test equipment

1) Computer 1

2) Oscilloscope（100MHz） 1

3) Multimeter (VICTOR VC9801) 1

4) DC Voltmeter 1

5) Oscilloscope Tektronix2232 1

6) 直流电源:PR-602A 1 台

7) 电流放大器及电流探头: Tektronix TCP300 及 1A 电流探头 TCP312W 1 个

8) 高压探头:Tektronix 的 P6015A(1000：1) 1 个

9) 数字万用表：Agilent 的 34401A 或者 FLUKE 187/189 1 台

4 T he item and method of debugging

4.1 Adjustment manual book of LCD panel Four-CCFL inverter (PCB Board P/N:35007175)

4.1.1 Test method

4.1.1.1 While mesureing the inverter ,we usually connect the high voltage probe to the output,but this will change the original path value called load effect. Most high voltage probes have 3PF capacitacne such as Tektronix P6015A,when we measure the Four-CCFL inverter,in order to balance the load effect of two sides ,we advise using two high voltage probes to measure two side outputs.

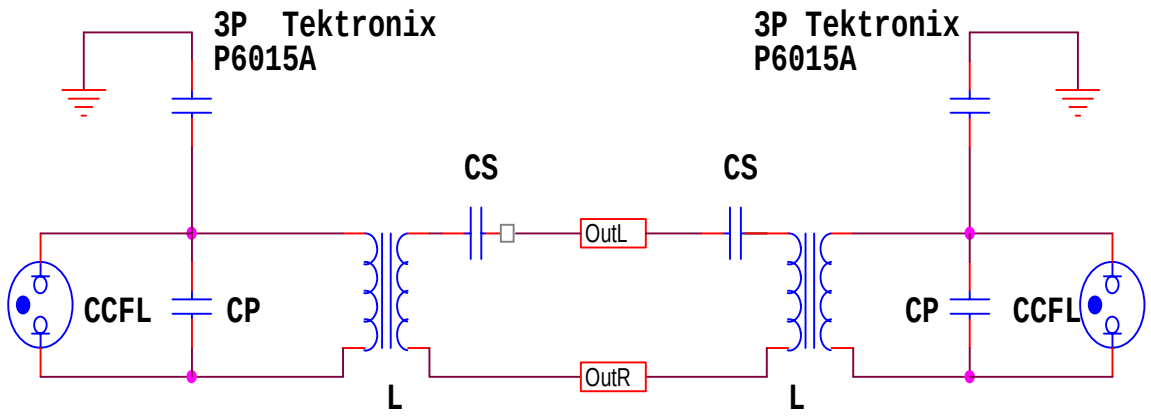

4.1.1.2 For MP1018 project,the outputs have the capacitance divider ,see figure as below,when we measure the output voltage,we may measure the parallel connection voltage value of the C722 and C730 or C724 and C731,then according to theformula Vout1=Vc1*(C722//C730)/C721,Vout2=Vc2*(C724//C731)/C723,we m ay get the output voltage value(Vc1,Vc2 means the parallel connection voltage value of the C722 and C730 or C724 and C731). At the same time ,we should pay attention to the followings : First,observe the output voltage waveform is distort or not.Second ,observe t he output waveform fr equency is between 40 kHz and 60kHz or not.Third,disconnecting any output ,observe the start-up voltage and start-up time is right or not.

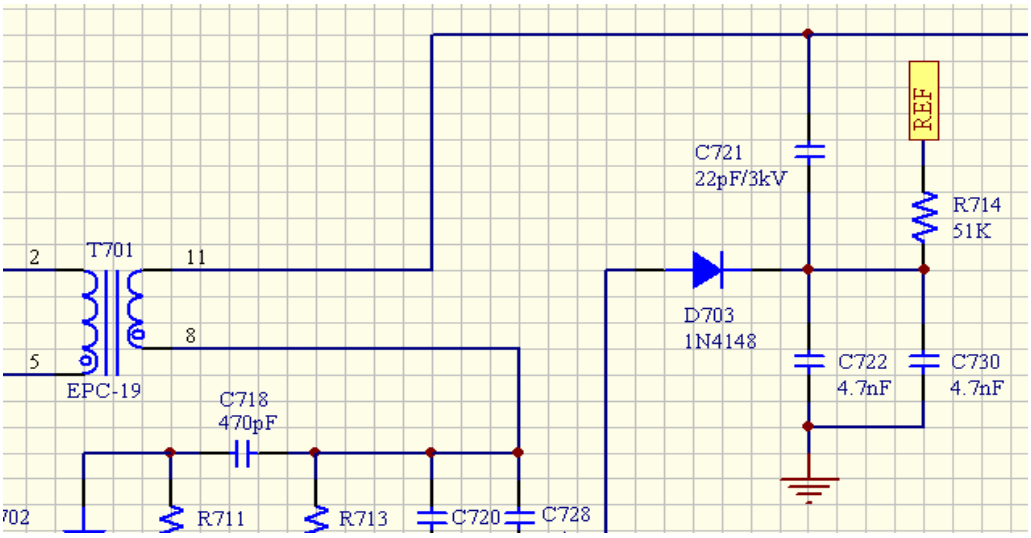

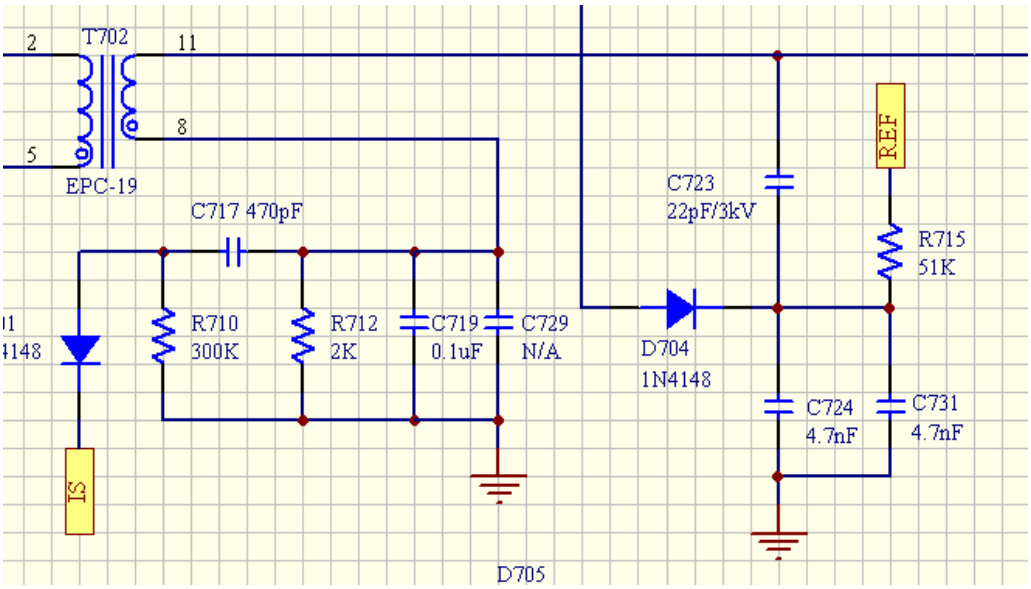

4.1.1.3 Because the a ctual impedance and t heoretical impedance of the LCD panel's l amps have a little tolerance,we pay more attention to the output current in actual measurement.The LCD panel's lamps need a constant current s ource to maintain the brightness,so we may make a high frequency amperemeter in series with the

low-voltage output of XS702,XS703,XS704,XS705,then adjust the input voltage equals 12V,as long as the current meets the requirement of the specification(5.5--6.5mA),it can keep the brightness of the lamps.

4.1.1.4 Force 0-5V voltage to the input port that is the third pin of XS701. Confirm if it will shut down at 0V and start at 5V.

4.2 Digital signal part

KLC-TM1508 start order：

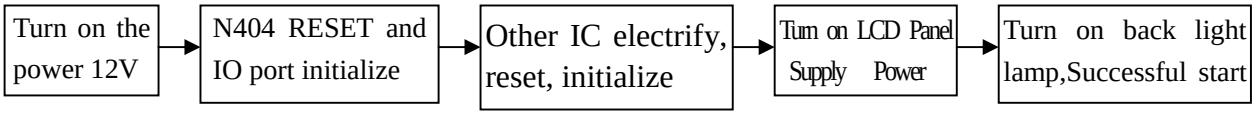

4.2.1 After turning on the power, if blank screen appears (no back light lamp), just press POWER button several times, if blank screen still there,

4.2.1.1 Check if the voltage of every power supply is normal.

4.2.1.2 Check if the crystal oscillator Z402 (14.318180MHz), Z301 (24.576MHz) oscillate or not, and oscillate frequency is right or not.

4.2.1.3 Back light control signal (BKLON) of PIN 3 of XS514 has high level (about 5V) or not, if not, chec k whether fault sold ered or short circui t happened to Q504,R580,R588.

4.2.2 If back light lamp lights but no screen displays,check N404 reset circuit and crystal oscillator output to make sure CPU is under work, if CPU is under work, then check signal channel. Signal channel is composed of two parts: Video channel (including antenna, AV, S-terminal input) and RGB channel for PC. If no picture displays or bad code displays when input either of these two channel signal in turn, control signal maybe wrong, then use oscilloscope to check waveforms at test points DEN, DVS, DHS and DCLK are normal or not following the rule from back to front.

4.2.3 If just picture color has problem, then shift input to RGB input, and output R,G,Bmono signal from computer to find the wrong color, then use oscilloscope to test XS504 pin to find the wrong data cable following the same order.

4.2.4 If just video channel has problem, check N301 signal output VCLK,V-Hs, V-Vs(TEST POINT), control signal -DVS DHS DCLK and DEN output from movement compensation N404have waveform or not to find the problem.

4.3 IF Channel adjustment

4.3.1 Preparation steps

4.3.1.1 Connect (+) of RF of TV signal generator PM5518 to Pin 11 of RF TUNER N1000, (-) to Pin 3 of RF TUNER N1000.

4.3.1.2 Set TV signal generator PM5518 RF output to the maximum.

4.3.1.3 Set TV signal generator PM5518 RF Output to 38.0MHz, and set video output signal of this signal generator to gray scale.

4.3.1.4 Connect DC Voltmeter “+” to Pin 8 of N1000, - to RF TUNER cabinet.

4.3.1.5 Connect oscilloscope probe + to Pin 10 of XP6010, - to RF TUNER cabinet, then set oscilloscope to 50mV/div Time/div TV-H(s), and set to TV-H simultaneously.

4.3.1.6 Connection between TV board and TESTER is shown as the following figure (4).

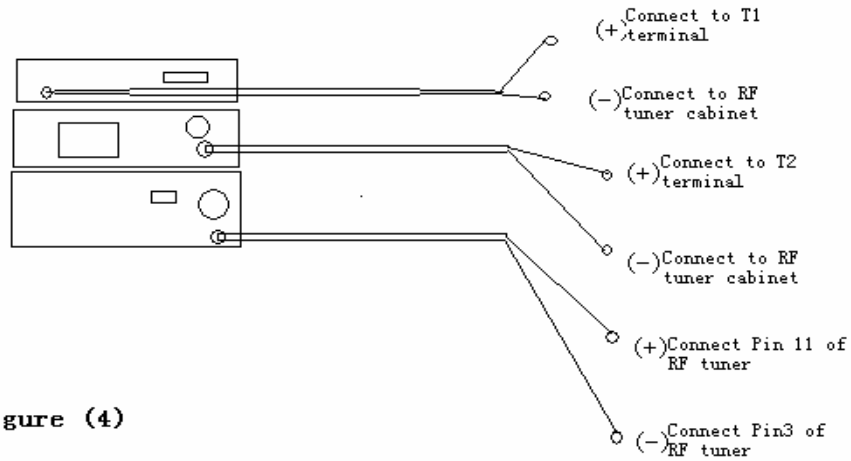

Figure (4)

4.3.2 Adjustment steps

4.3.2.1 Plug the power cord.

4.3.2.2 Turn T1000 magnetic core with ceramic aligner screwdriver so that reading on DC Voltmeter is 2.5V 0.2V.

4.3.2.3 Waveform of T2 on the oscilloscope can be observed as the figure (5) shown.

4.4 AGC adjustment

4.4.1 Preparation steps

4.4.1.1 Connect TV board whose IF has been adjusted to Power board and motherboard (Do not install TV board into the back cabinet).

4.4.1.2 Set TV signal generator to 56 channel (855.25MHz), apply RF 62dB 3dB half color bar signal and input to ANTENNA INPUT of RF TUNER.

4.4.1.3 Connect (+) end of DC Voltmeter to Pin 1 of N1000 of RF TUNER, (-) end to Pin 3 of RF TUNER.

4.4.2 Adjust steps

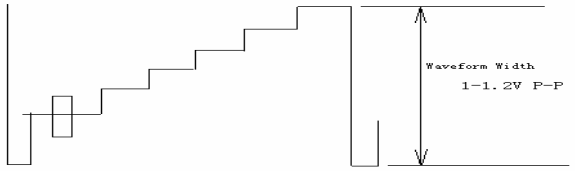

Figure (5)

4.2.2.1 Check if connections connect well, start automatic searching.

4.2.2.2 Press PROG. / button to display the channel you hav e received on the scre en after automatic searching finishing.

4.2.2.3 Adjust VR1000 with small screwdriver so that DC Voltmeter is within 2.0V – 2.5V(maximum),then reverse VR1000 and just make c onfusi onal of noi se disappear on the picture.

4.5 White calibration adjustment

1 Receive black or white signal under AV or PC mode, adjusting brightness and contrast to set the brightness to 15Nit in dark area and 90 Nit in bright area.

2 Adjust white balance.Press “MENU”button once, then press “PRE.CH”five times to enter factory menu, select “Temp” Menu,

Adjust	Red	0-100
	Green	0-100
	Blue	0-100

3 Adjusting chromaticity coordinates of black and white to fit the requirement (X=0.313, Y=0.329), or plug automatic calibration system to adjust white calibration automatically.

KLC-TM2018

1.Preface

1.1 Applicable area

This test manual is applicable for KLC-TM2018.

1.2 Test notes

1.2.1 Please follow the pointed test steps and choose the proper test equipment to conduct adjustment, otherwise good effect of TV set could not be obtained. Pointed bias voltage value should be ensured during test to get satisfied test result.

1.2.2 Be sure that you have the static electricity –protective glove in before test.

2 Test environment

1）Temperature：15~35°C

2）Relative humidity 45 ~ 75%

3）Air pressure: 86 ~ 106kPa

3 Test equipment

1) Computer 1
2) Oscilloscope（100MHz） 1
3)Multimeter (VICTOR VC9801) 1
4)DC Voltmeter 1
5)Oscilloscope Tektronix2232 1
6)Cement Resistance 1
7)Test Clamp 1
8）TV signal generator 1

4 .T est i tem a nd met ho d

4.1 Power Supply Board

4.1.1 The input and output characteristic test of power

4.1.2 Intention of test: Check input and output to find if short circuit.

4.2 checking method:

use Multimeter (VICTOR VC9801) of resistor to check

Number	Item	Test Point	Standard
1	The resistor of AC input	AC Input Connector XS901	No short circuit
2	The resistor of V12 output	V12 output of connector XS902	No short circuit
3	The resistor of V12 assistant power output	Between the pins of C908	No short circuit

Please check short circuit point on the PCB board if you find short circuit.

4.2.1 Test after supply AC 220V

4.2.2 Intention of test:

4.2.3 Supply AC 220V step by step,then the circuit start to work

4.2.4 Test the voltage of output

4.2.5 Short output test

4.2.6 The Peak-Peak value yawp test of the power output

4.2.7 The test of turning on and off TV

4.2.8 Checking method

4.2.9 Test the empty loading output of power supply Fix the power supply board on Test clamp unconnecting the load then input 220VAC and turn on power switch to test the output voltage by multimeter

Number	Ietm	Test point	Empty loading	Standard
1	V12 voltage	Output of V12	0.0A	12.0V 0.48

Listen if there is deviant noise at the same time.

4.2.10 Test the rated load output voltage Turn off the power then connecting the load on output and turn on the power to test the output voltage by multimeter Rated load output voltage / current are as follows:

Number	Item	Current standard	Voltage standard
1	V12 s rated load	5A	12.0V 0.48

Listen if there is deviant noise at the same time.

4.2.11 Test of V12 s shorting-output protect

Make the output shorted in 3 seconds the output voltage should be 0V.after relieving the short ,turn off the power and discharge the input filter capacitor C904 10 seconds by discharge resistance (cement resistance 2-5W510),then supply the power again using multimeter to test the output of power The output voltage should come back normally 12.0V 0.48

4.2.12 The test of powers peak-peak value yawp output Under the rated load Initialize the oscill oscope 50mV per unit and parallel-connect 0.1UF and 10UF capaci tor on probe to see the output ripple is OK or not.

Number	Item	Test point	Standard
1	12V output	V12 output	150mV

4.2.13 The fully loading and empty loading experiment of turning on/off TV

Turn on/off TV per 5 times every 5 seconds under the two states .Make sure if the ou tput is OK or not.

4.2.14 The standard of power aging experiment

Every product should aging 8 hours under rated load and 45 C Make sure the output voltage is in regular range.

4.3 Digital signal part

4.3.1 Digital signal board power part

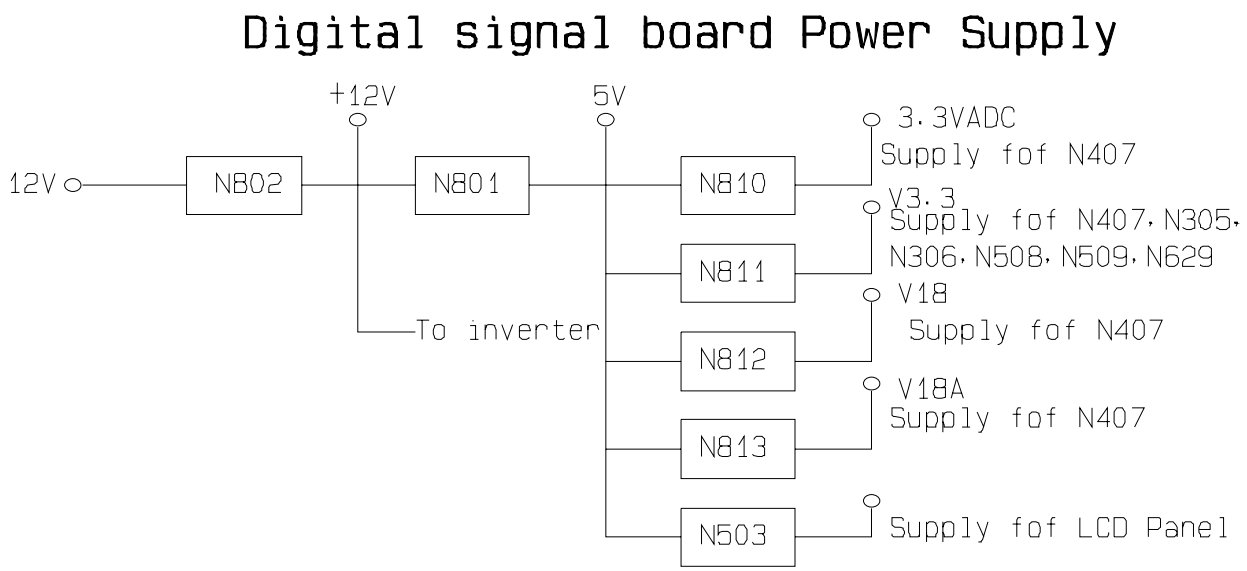

4.3.2 Verify the state of TV set

Please switch the TV on by “Power on/off” switch,then verify the LED color of touch button.If it is red(standby state),the back-end power has been shut off(the voltage of N802 No.5 pin is 0V),the supply power for IC-chip has been shut off except N803 normally working.Please test the voltage of D616 is 5V to verif y the power of N803 no rmal on standby state.

4.3.3 Checking Supply Power.

If the color of LED is green,the power supply for signal board(Test the Number 5,6,7,8 pin of N802 v oltage is 12V).N801 supply 5V power(Test the anode of C853).N 810 N811 supply 3.3V(Tes t the No.2 pin),N812 N813 supply 1.8V(T est the No.2 pin)for main IC N407,N305.

4.3.4 Digital signal part

KLC-TM2018 start order：

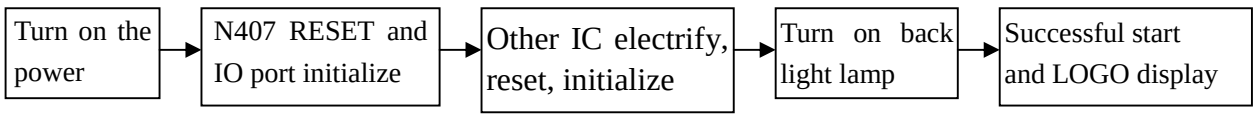

4.3.5 After turning on the power, if blank screen appears (no back light lamp), just press POWER button several times, if blank screen still there

4.3.6 Check if the voltage of every power supply is normal.

4.3.7 Check if the crystal oscillator Z4. 1(14.318MHz)oscillate or not, and oscillate frequency is right or not.

4.3.8 Back light control signal (BKLON) of PIN 3 of XS512 has high level (above 3.5V) or not, if not, check whether fault soldered or short circuit happened to V507, R559, R560,R561

4.3.9 If back light lamp is on while there is no display,check N407's reset circuit and the output of the oscillator to confirm the CPU is working or not.If CPU is working ,then checking the signal channel. Signal channel has been divided into two parts, general video channel(including antenna, AV, S-terminal input, Y, Cb, Cr) and HDTV channel (Including Y Pb Pr and RGB). If no any picture displays or bad code displays when switching between these two channels, control signal may be wrong. Please use oscilloscope to check test point DEN, DVS, DHS and DCLK from end to front to find whether waveform displayed on the oscilloscope or not, if not, check if fault solder or short circuit happened.If just picture color has problem, switch INPUT to RGB input, then input R, G, B monochrome signal separately from computer to find the problem colors. Check data line of XS504 with oscilloscope according to the above form to find it's problem.

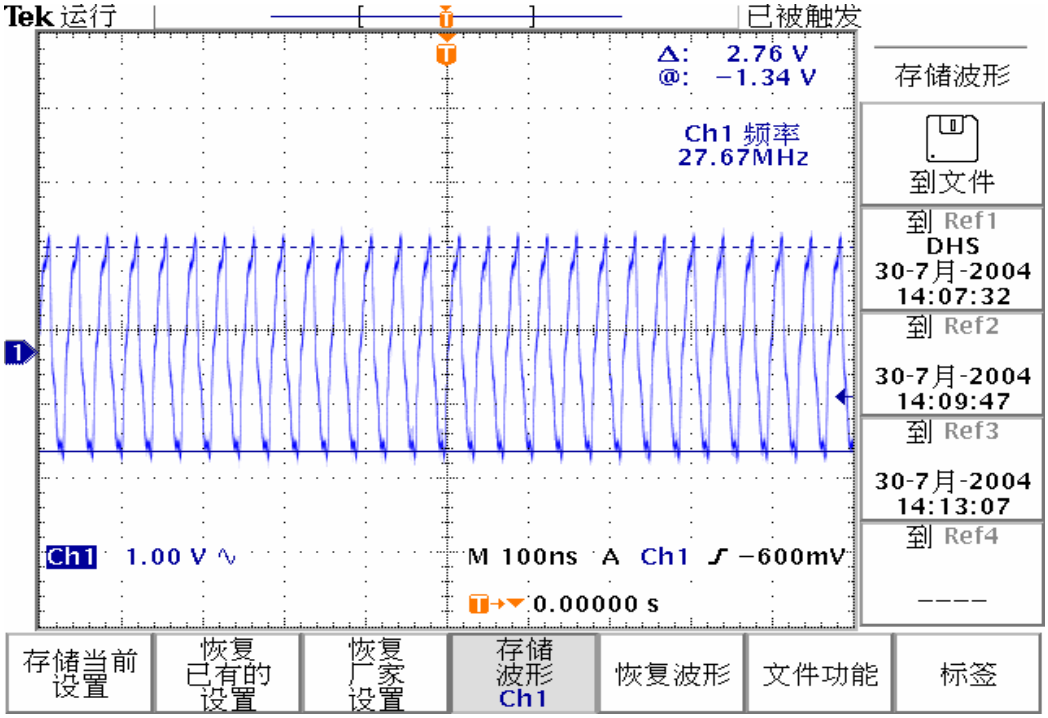

DCLK Waveform

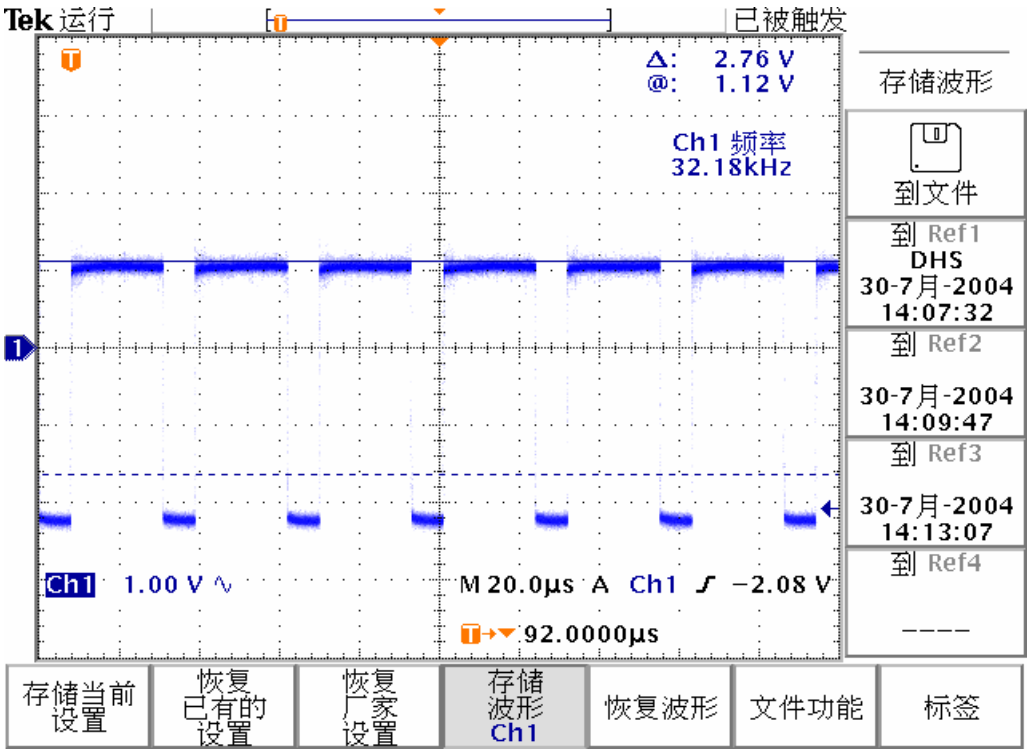

DEN Waveform

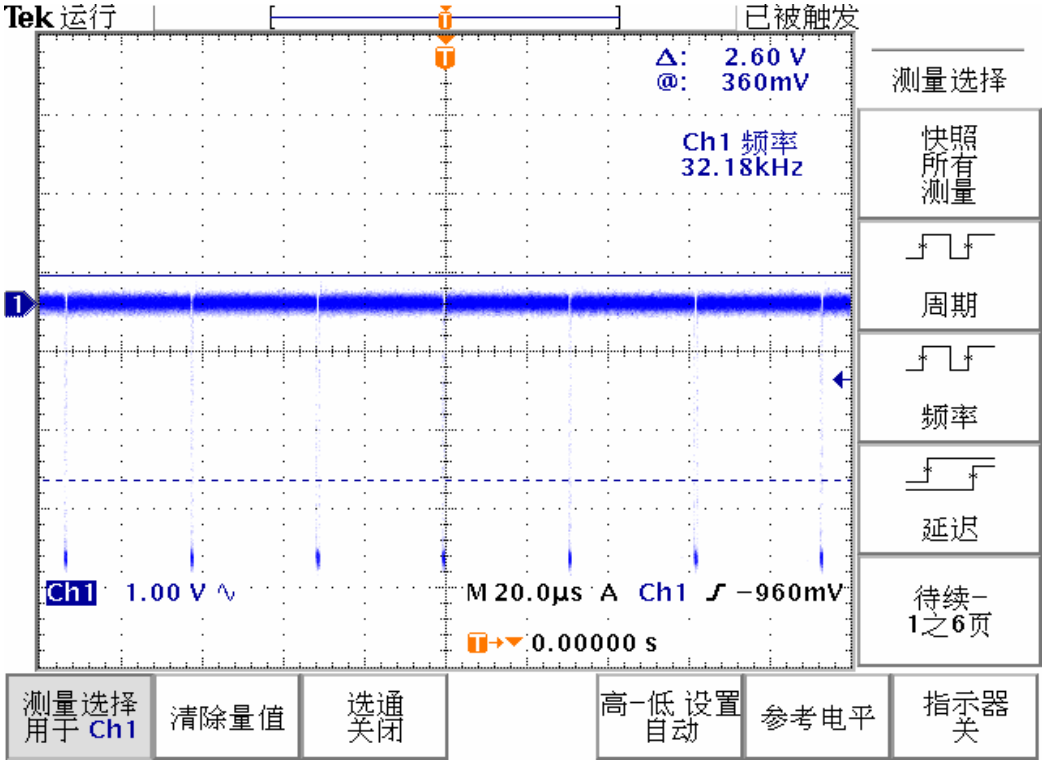

DHS Waveform

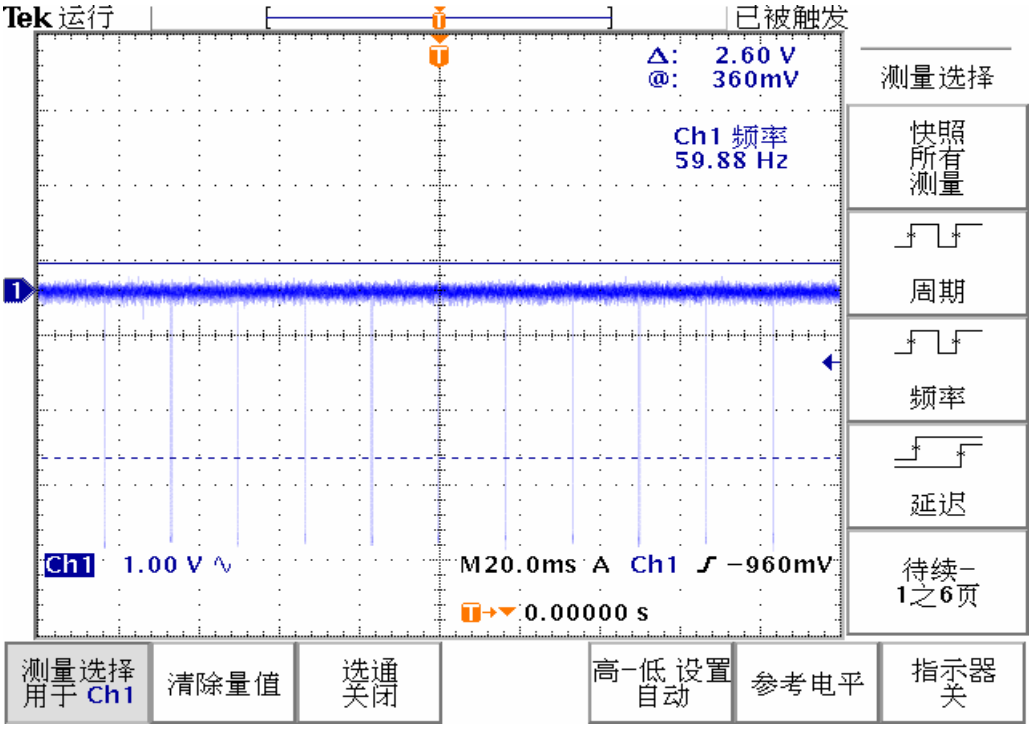

DVS Waveform

4.3.10 If only one channel has problem check the signal of this channel normal or not.AV1,AV2,S-Video,Y,Cb,Cr are inputted from analog signal board to digital signal board RGB Y Pb Pr(digital signal board)are input N407 by N603.Using oscilloscope

to check ICN1003's output signal TV-Y,TV-Cb,TV-Cr,TV-HS,TV-VS(1 3 5 7 8pin of

XP1005),to verify the waveform is right or not.If not ,check whether fault soldered or short circuit are happened Else ,check the 5V supply voltage of N601,N603 on digital signal boardAs the Above orderwe may find the problem of RGB Y Pb Pr video signal

Output a color bar signal to AV1 by signal generator PM5518,check the waveform if normal or not with oscilloscope.

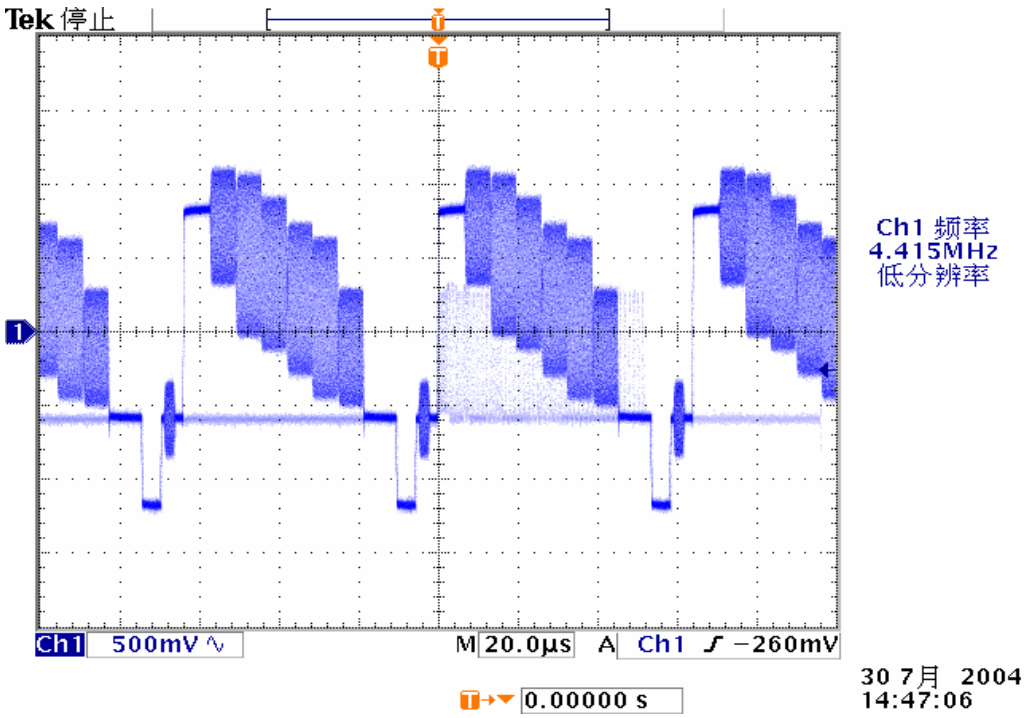

CVBS color bar Wave form

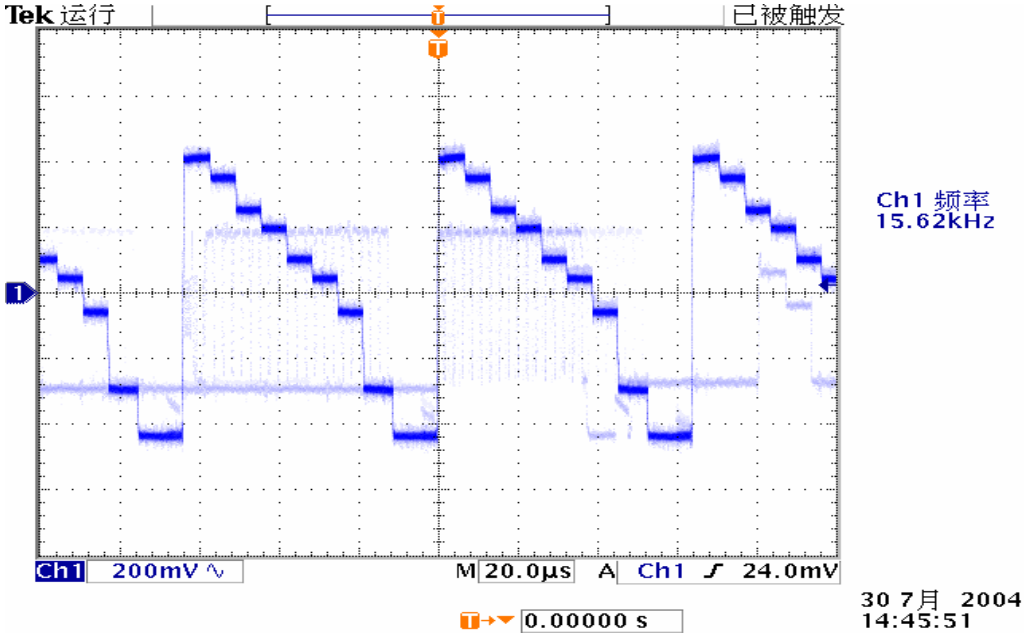

TV_Y Waveform XP 10 05 ’s 1 Pin

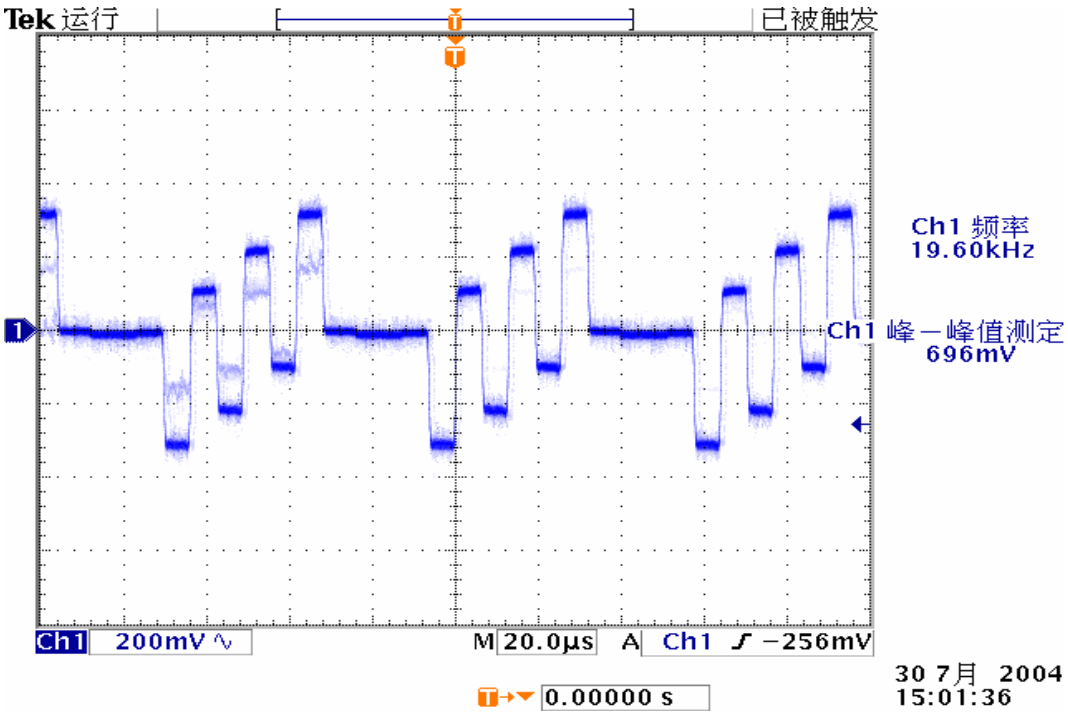

TV_ Cb Waveform XP1005's 3 Pin

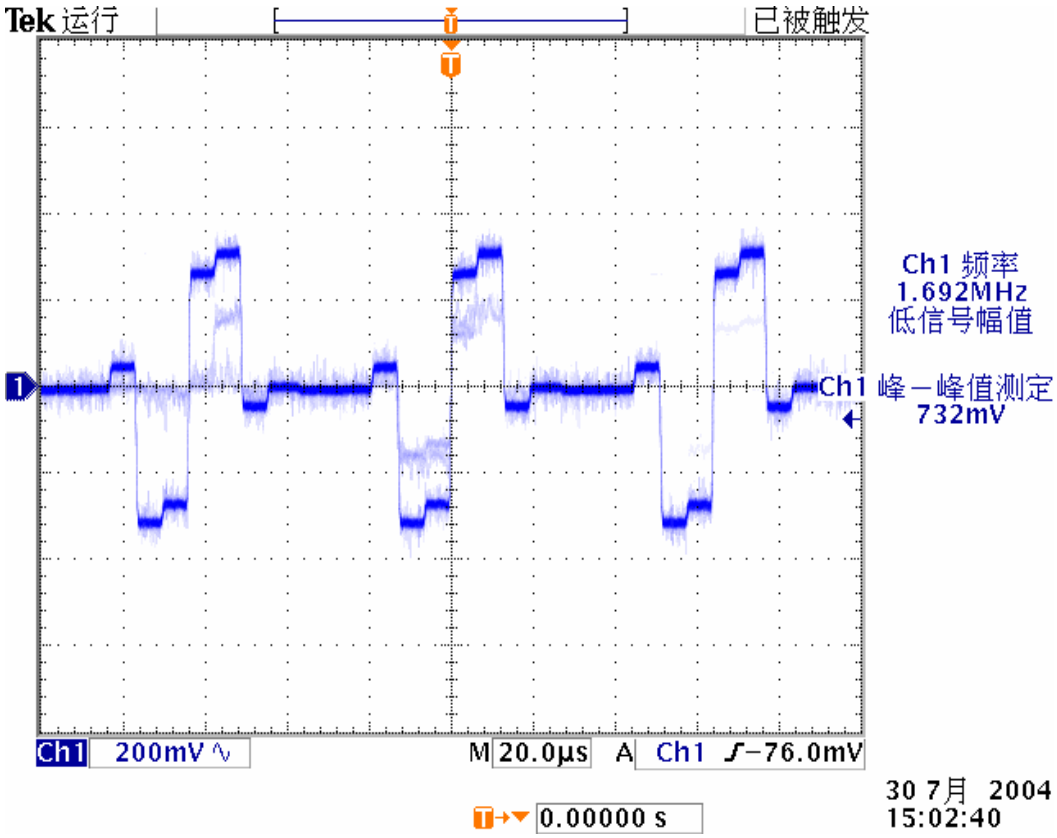

T V_ Cr Waveform X P10 05 's 5 Pin

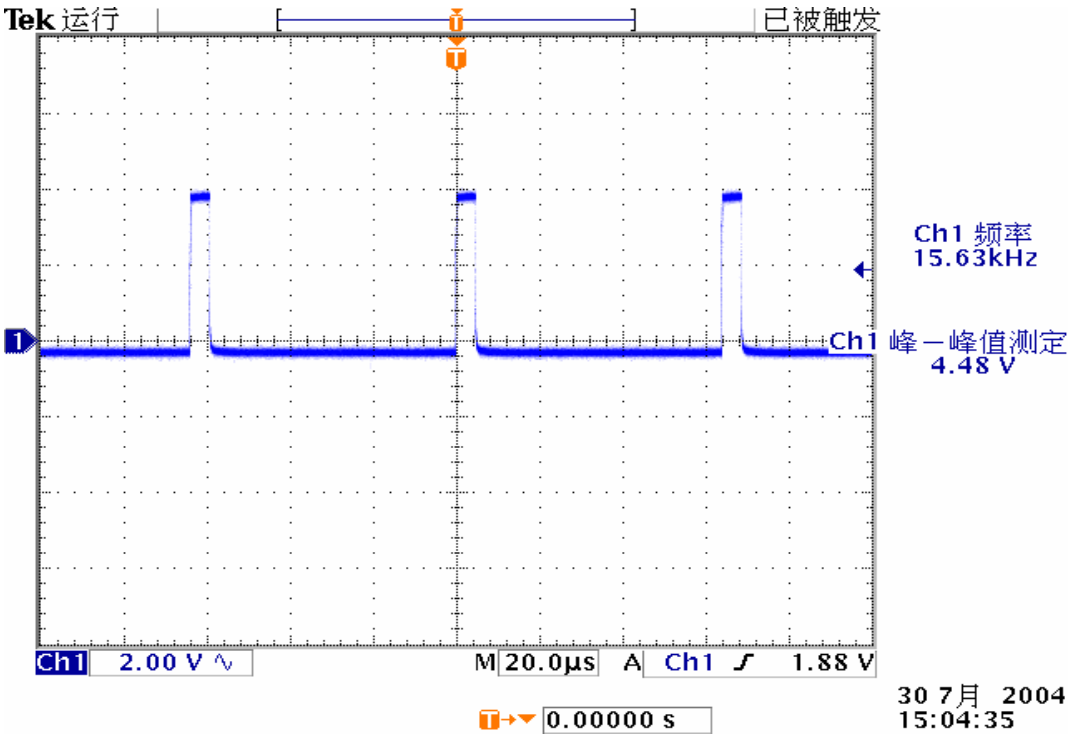

TV _H s Waveform X P10 05 ’s 7 Pin

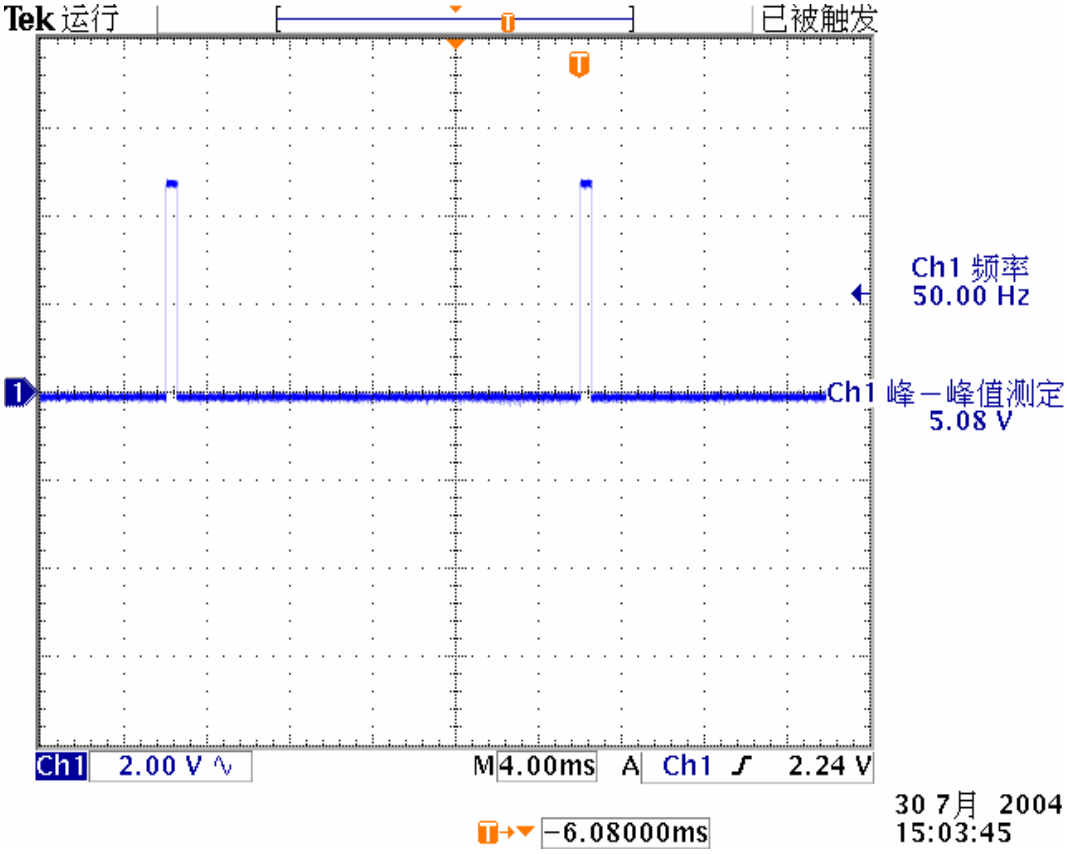

T V_V s Wavrform XP1005’s 6 Pin

4.4 Analog signal board

4.4.1 Analog signal board power part

Analog signal board is supplied by 12V transformed to 5V by N1101,N1815 After

connecting the power ,check the voltage of N1101's 2 pin with multimeter to see if the voltage of C1809 's anode is right(about 5V) or not This is the back-end IC's normal power supply.

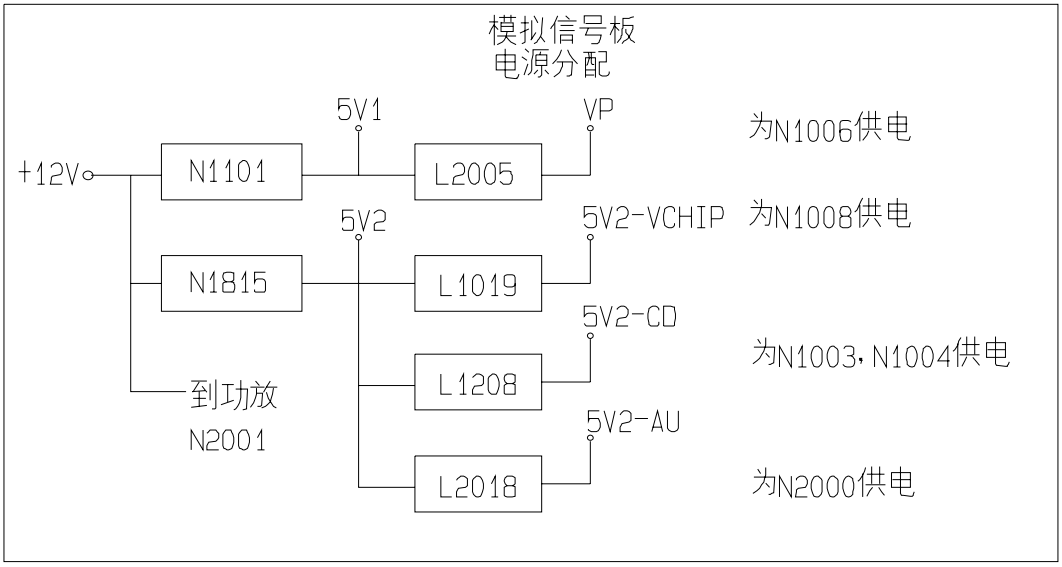

4.4.2 IF channel AFC adjustment on analog signal board

Input a 38MHz IF Signal generated from TV signal generator to RF TUNER according IF cable whose one side to 11 pin of RF TUNER and the other to 3 pin of RF TUNER(GND). IF channel AFC of LC-TM2018 has been adjusted automatically by software which may check the power supply of IF IC is normal or not See if the anode voltage of C2224 is 5V or no t and check N1006 s 21 pin voltage is 2 .5 0.2V If not check whether fault soldered or short circuit happened to R2029,R2030.

4.4.3 AGC adjustment on analog signal board

4.4.4 Preparation steps

4.4.5 Connect TV board whose IF has been adjusted to Power board and motherboard .

4.4.6 Set TV signal g enerator to 56 channel (855.25MHz), apply RF 62dB 3Db half color bar signal and input it to ANTENNA INPUT of RF TUNER.

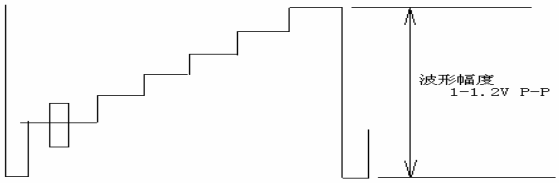

图(5)

4.4.7 Adjust steps

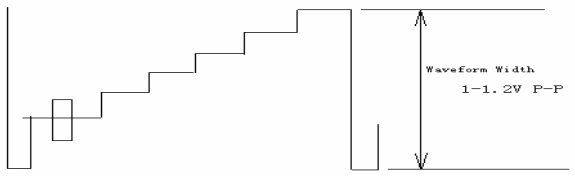

Figure (5)

4.4.8 Check if connections connect well, start automatic searching.

4.4.9 Press PROG. △/▽ button to display the channel you have received on the screen after automatic searching finishing.

4.4.10 Press factory menu button to display factory menu on TV and select TB1274 ,press PROG +/- button to select the tda9885 AGC item of sub-menu ,then press volume +/- but ton to adjust the val ue until the snows ar e disappear The value after adjusting is about 12-16 and the tuner voltage of first pin is about 2.0 0.2V.

4.5 White calibration adjustment

4.5.1 Receive black or white signal under AV or PC mode, adjusting brightness and contrast to set the brightness to 5 Nit in dark area and 90 Nit in bright area.

4.5.2 Adjust white balance. Enter factory menu, select cal. Menu, and swap color temp item to user.

Adjust	Red	0-255
	Green	0-255
	Blue	0-255

4.5.3 Adjust black balance. Enter factory menu, and select TB1274 Menu.

Adjust	Red offset	0-127
	Blue offset	0-127

4.5.4 Adjusting chromaticity coordinates of black and white to fit the requirement (X=0.304, Y=0.325), or plug automatic calibration system to adjust white calibration automatically.

Trouble Shooting

Key IC list（KLC-TM1508）

Item	Type	Maker	Package	Circuit No.	Qty.
1	PQ05RD11	Sharp		N1001	1
2	TDA1517P	PHILIPS	HDIP18	N2001	1
3	24LC16B/SN	MICROCHIP	SOIC-8	N309	1
	AT24C16AN-10SI-2.7	ATMEL			
4	74LVC541APW	PHILIPS	TSSOP-20	N514	1
5	74LVC32A D	PHILIPS	SO-14	N608	1
6	AM29LV800DT-70EC-AMD/#	AMD	TSOP-48	N307	1
	MX26LV800BTC-55-旺/#	MXIC			
7	1117-1.8V	1117 serial	SOT223	N810，N811	2
8	1117-3.3V	1117 serial	SOT223	N812，N817	2
	MP1410ES-LF-SOIC-8-MPS	MPS	SOIC-8	N815	1
9	SAA7114H	PHILIPS	LQFP100	N301	1
10	PW130-10Q	PIXELWORKS	208PQFP	N404	1
	TDA9808T	PHILIPS	SO20	N1010	1
	MSP3463G	MICRONAS	PMQFP64	N2000	1
11	BA033FP-ROHM	ROHM		N818	1
	M385 LVDS	MRT	TSSOP-56	N502	1
12	MP1018EM	MPS	TSSOP28	N701	1
14	Tuner-AFT1/6000	Qingjia		N1000	1

Key IC list（KLC-TM2018）

Item	Type	Maker	Package	Circuit No.	Qty.
1	PQ05RD11	Sharp		N1101	1
2	TDA1517	PHILIPS	SIL9MPF	N2001	1
3	24LC16B/SN	MICROCHIP	SOIC-8	N306	1
	AT24C16AN-10SI-2.7	ATMEL			
4	74LVC541APW	PHILIPS	TSSOP-20	N508	1

	PIC12F629	MICROCHIP	SOIC-8	N803	1
5	74LVC273A	PHILIPS	TSSOP-20	N509	1
6	AM29LV800DT-70EC-AMD/#	AMD	TSOP-48	N305	1
	AM29LV800BB-90EI-AMD/#	AMD			
7	1117-1.8V	1117 serial	SOT223	N813，N812	2
8	1117-3.3V	1117 serial	SOT223	N810，N811	2
	MP1410ES-LF-SOIC-8-MPS	MPS	SOIC-8	N1815，N801	2
9	TB1274AF	TOSHIBA	QFP48-1014-0.8	N1003	1
10	TC90A69F	TOSHIBA	SOP16-P-300-1.27	N1004	1
	TDA9885T	PHILIPS	SO24	N1006	1
	MSP3463G	MICRONAS	PMQFP64	N2000	1
	74HC4052D	PHILIPS	SO16	N602	1
11	PW1306	PIXELWORKS	208PQFP	N407	1
	74LVC14A	PHILIPS	SO14	N629	1
	FSAV330	FAIRCHILD	TSSOP16	N603	2
	PI5V330	PERICOM	QSOP16	N601	
	E3DS01	INFINEON		N901	1
	PC817B	Sharp		N902	1
12	KA431Z	FAIRCHILD		N903	1
14	Tuner-AFT1/6000	Qingjia		N1000	1

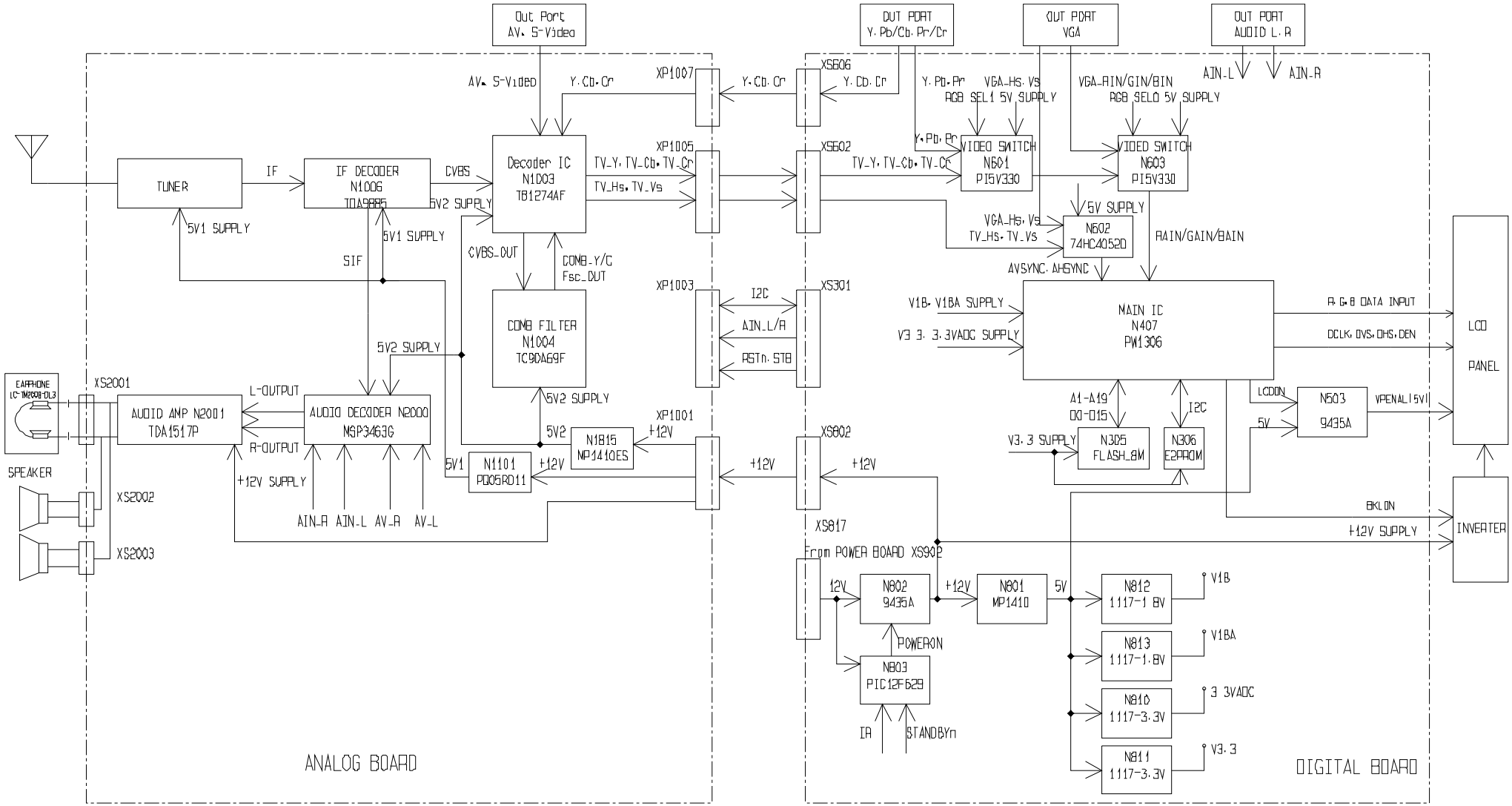

KLC-TM2018 SIGNAL PROCESSING

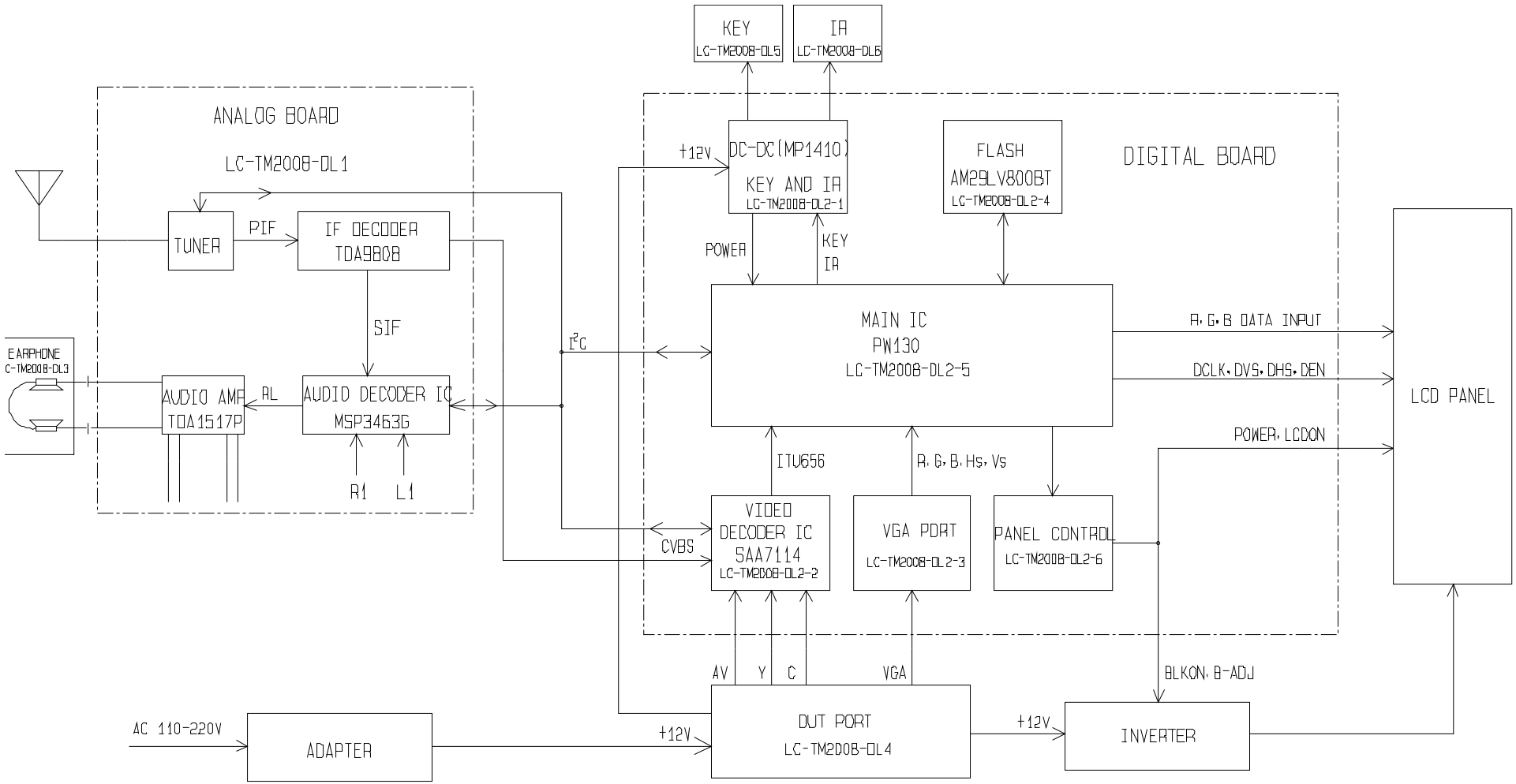

KLC-TM1508 SIGNAL PROCESSING

KLC-TM1508 Digital Board schematic circuit diagram

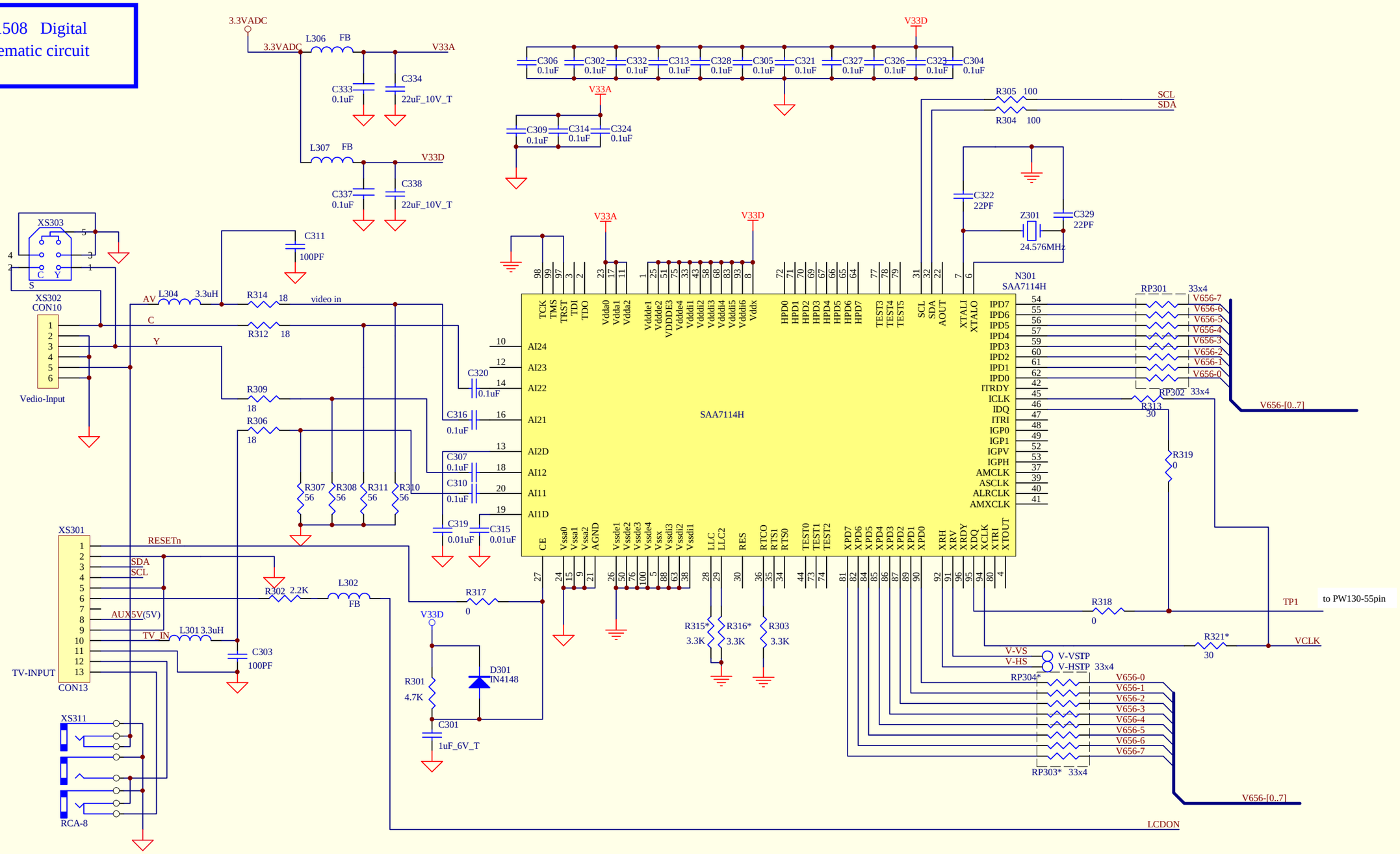

Title		
DYNAX ELECTRONICS(HK)LTD.		
Size: Orcad B	Number	Revision
Date: 29-Mar-2005	Sheet of	
File: E:\EE\LC-TM1580P\原理图\decoder1.sch	Drawn By:	

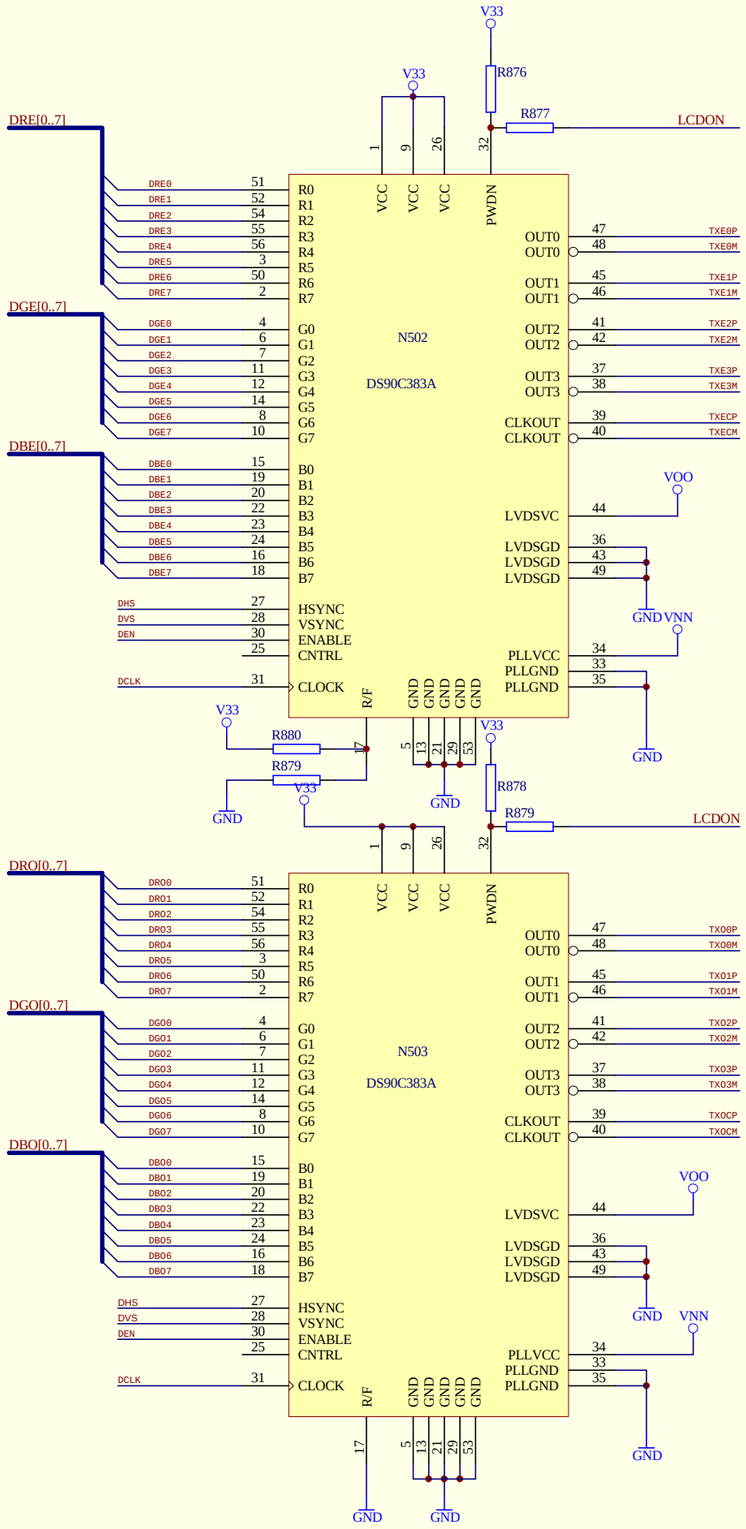

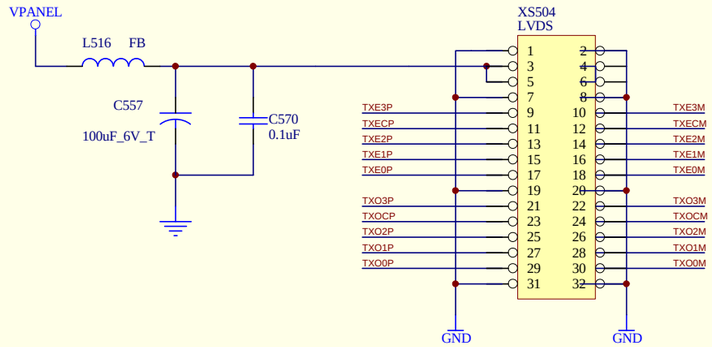

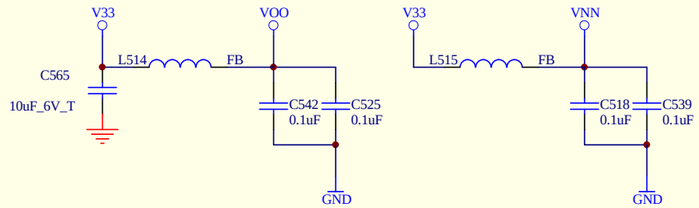

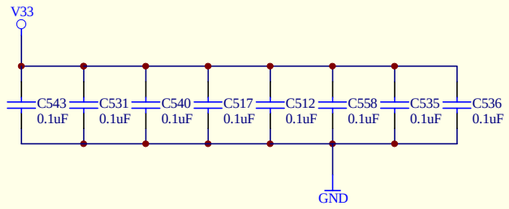

Bypass caps for U14

VOO is 3.3V LVDS power for U13 and U14.

Title DS90C383.SCH		
Size B	Number	Revision
Date: 29-Mar-2005	Sheet of	
File: E:\EE\LC-TM1580P\原理图\Ds90c3831.SCH	Drawn By:	

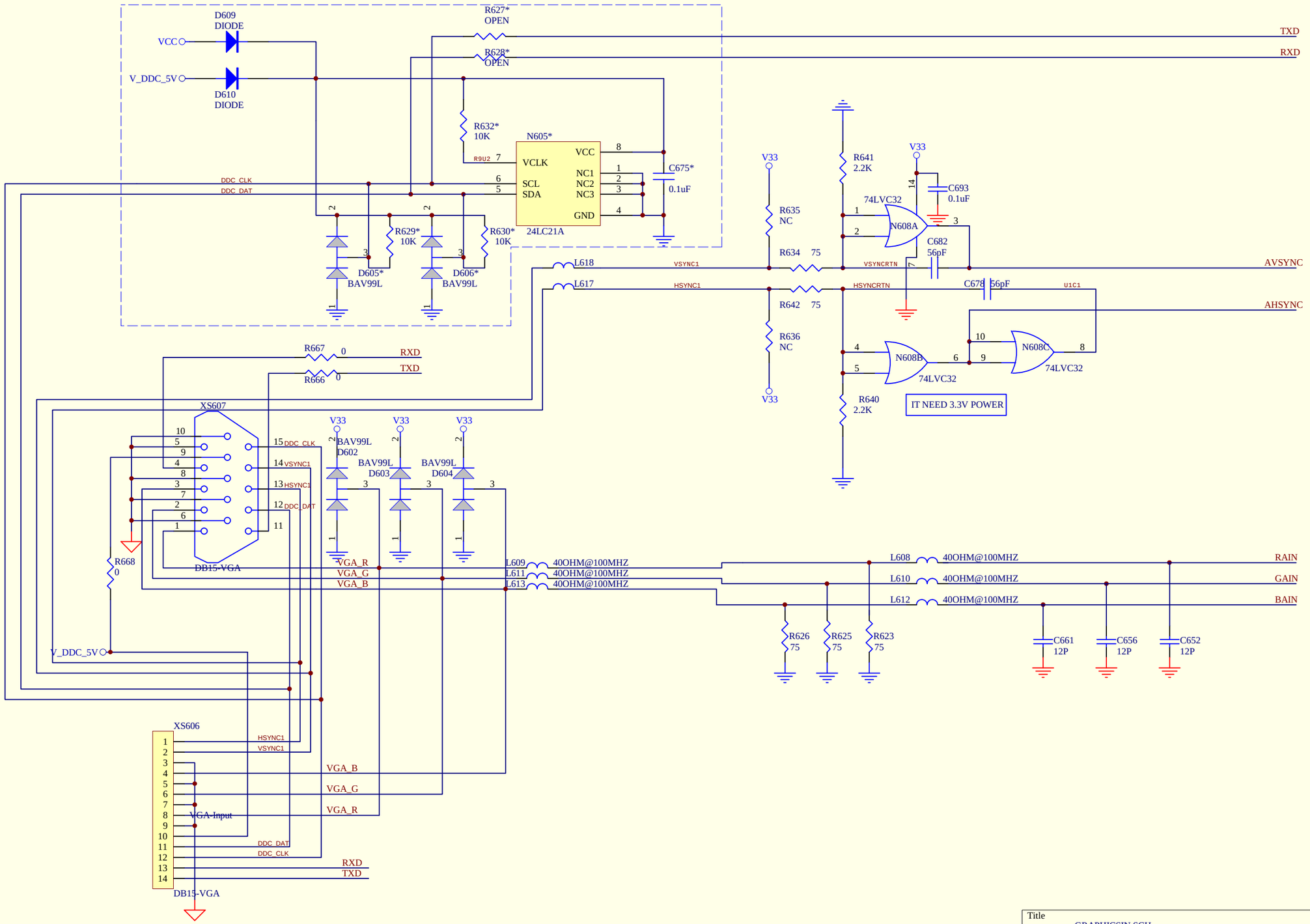

Title	GRAPHICSIN.SCH	
Size Orcad B	Number	Revision
Date: 29-Mar-2005	Sheet of	
File: E:\EE\LC-TM1580P\原理图\GRAPHICSIN.SCH	Drawn By:	

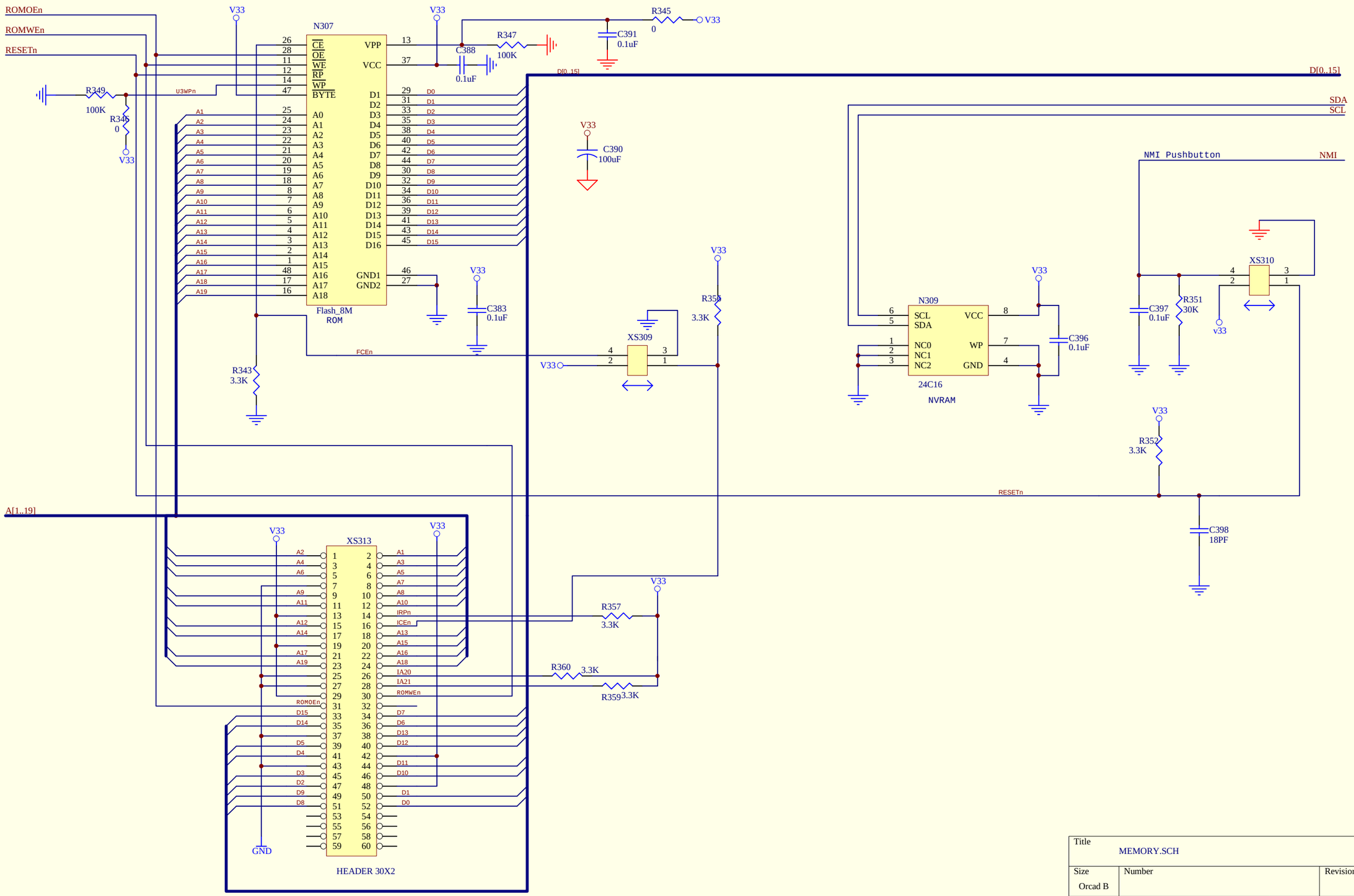

Title	MEMORY.SCH	
Size Orcad B	Number	Revision
Date: 29-Mar-2005	Sheet of	
File: E:\EE\LC-TM1580P\原理图\Memory1.SCH	Drawn By:	

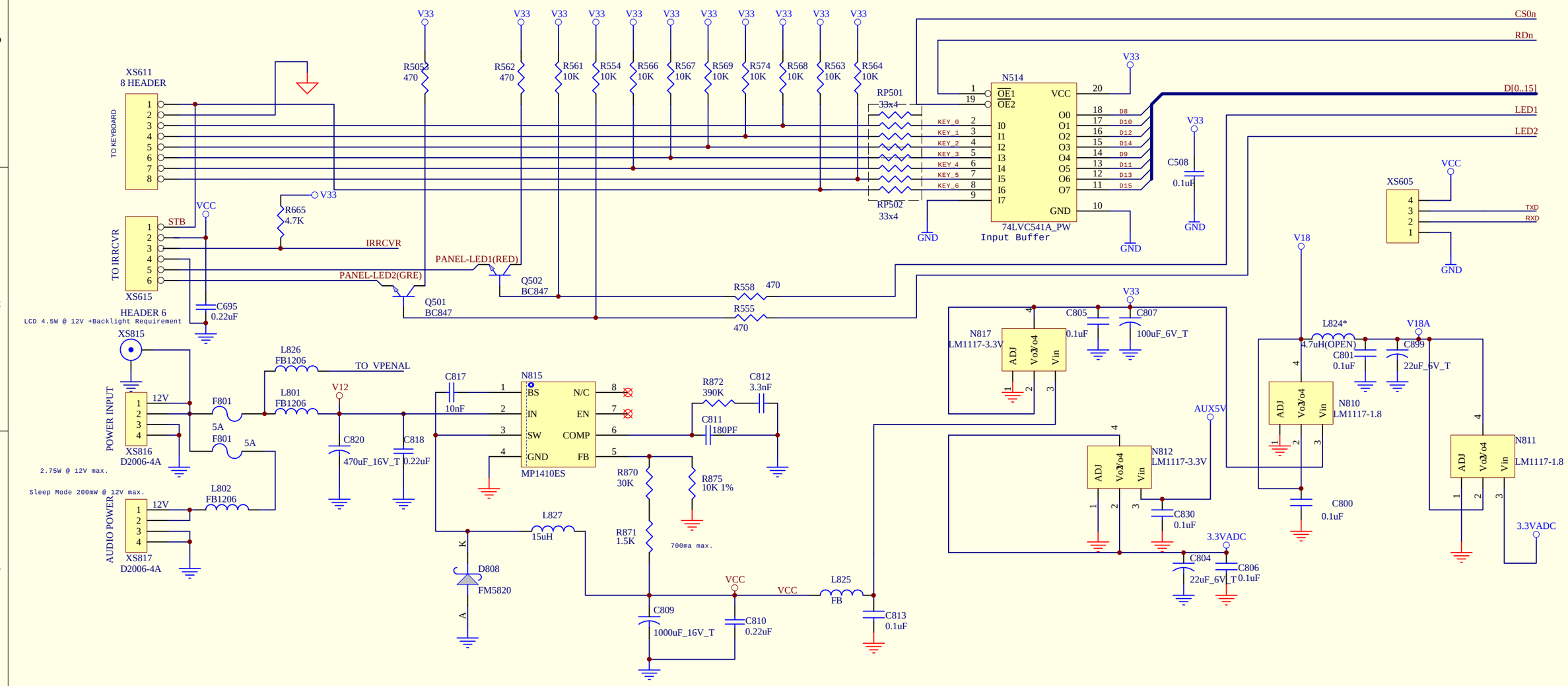

Title		
MISC		
Size: Orcad B	Number	Revision
Date: 29-Mar-2005	Sheet of	
File: E:\EE\LC-TM1580P\原理图\Misc11.SCH	Drawn By:	

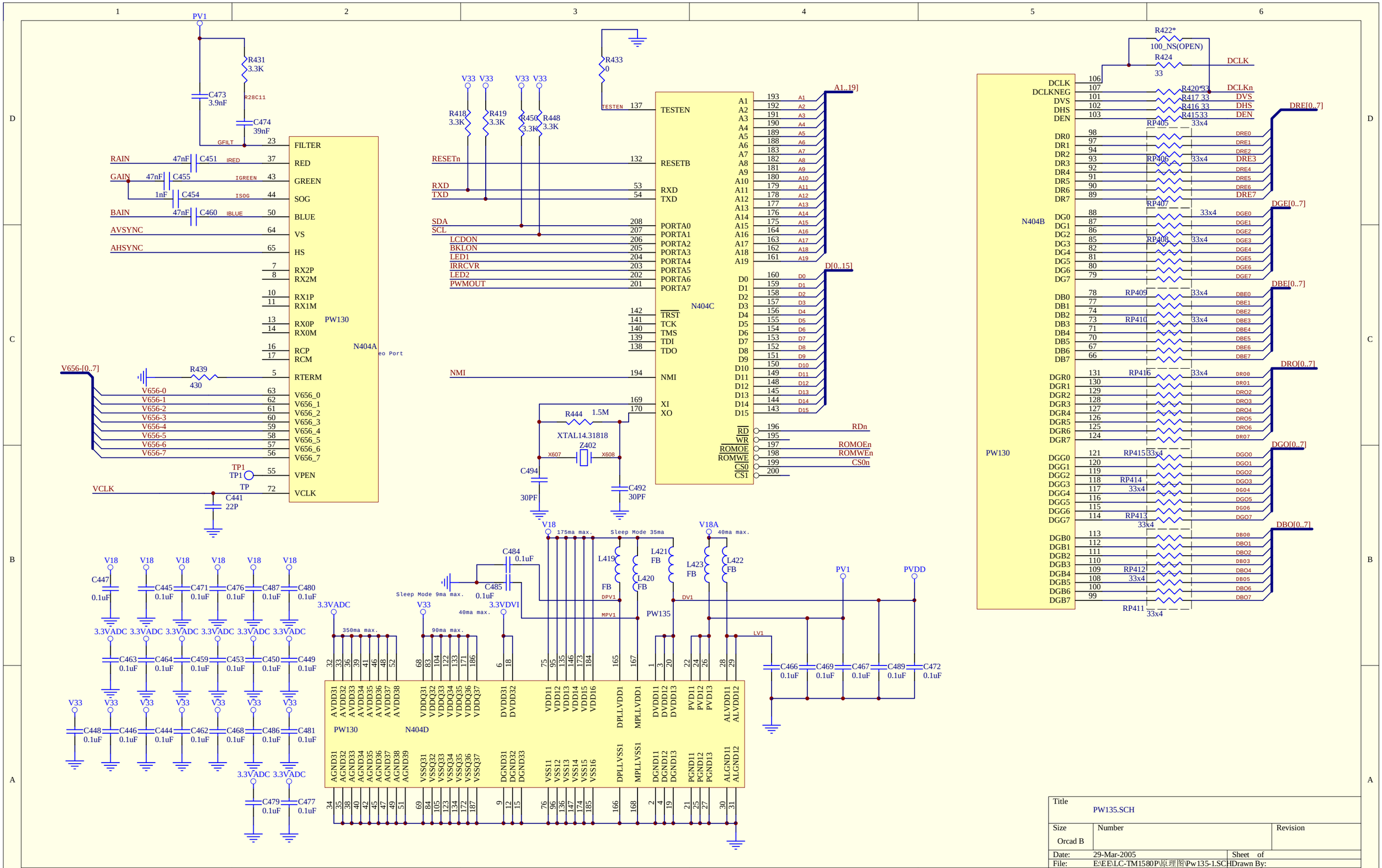
PW130
N404A
N404B
N404C
N404D
PW135
FILTER
RED
GREEN
SOG
BLUE
VS
HS
RX2P
RX2M
RX1P
RX1M
RX0P
RX0M
RCP
RCM
RTERM
V656_0
V656_1
V656_2
V656_3
V656_4
V656_5
V656_6
V656_7
VPEN
VCLK
TESTEN
RESETB
RXD
TXD
PORTA0
PORTA1
PORTA2
PORTA3
PORTA4
PORTA5
PORTA6
PORTA7
TRST
TCK
TMS
TDI
TDO
NMI
XI
XO
RD
WR
ROMOE
ROMWE
CS0
CS1
DCLK
DCLKNEG
DVS
DHS
DEN
DR0
DR1
DR2
DR3
DR4
DR5
DR6
DR7
DG0
DG1
DG2
DG3
DG4
DG5
DG6
DG7
DB0
DB1
DB2
DB3
DB4
DB5
DB6
DB7
DGR0
DGR1
DGR2
DGR3
DGR4
DGR5
DGR6
DGR7
DGG0
DGG1
DGG2
DGG3
DGG4
DGG5
DGG6
DGG7
DGB0
DGB1
DGB2
DGB3
DGB4
DGB5
DGB6
DGB7
A1..19]
D[0..15]
DRE[0..7]
DGE[0..7]
DBE[0..7]
DRO[0..7]
DGO[0..7]
DBO[0..7]
V656-[0..7]
RAIN
GAIN
BAIN
AVSYNC
AHSYNC
RESETn
SDA
SCL
LCDON
BKLON
LED1
IRRCVR
LED2
PWMOUT
RDn
ROMOEn
ROMWEn
CS0n
VCLK
PV1
PVDD
V18
V18A
V33
3.3VADC
3.3VDVI
DV1
DPV1
MPV1
LV1
XTAL14.31818
Z402
X607
X608
R431 3.3K
R433 0
R418 3.3K
R419 3.3K
R450 3.3K
R448 3.3K
R444 1.5M
R439 430
R422* 100_NS(OPEN)
R424 33
R420*33
R417 33
R416 33
R415 33
C473 3.9nF
C474 39nF
C451 47nF
C455 47nF
C454 1nF
C460 47nF
C441 22P
C494 30PF
C492 30PF
C484 0.1uF
C485 0.1uF
L419 FB
L420 FB
L421 FB
L422 FB
L423 FB
RP405 33x4
RP406 33x4
RP407 33x4
RP408 33x4
RP409 33x4
RP410 33x4
RP416 33x4
RP415 33x4
RP414 33x4
RP413 33x4
RP412 33x4
RP411 33x4
Sleep Mode 9ma max.
Sleep Mode 35ma
175ma max.
40ma max.
350ma max.
90ma max.
Title
PW135.SCH
Size
Orcad B
Number
Revision
Date: 29-Mar-2005
Sheet of
File: E:\EE\LC-TM1580P\原理图\Pw135-1.SCH
Drawn By:

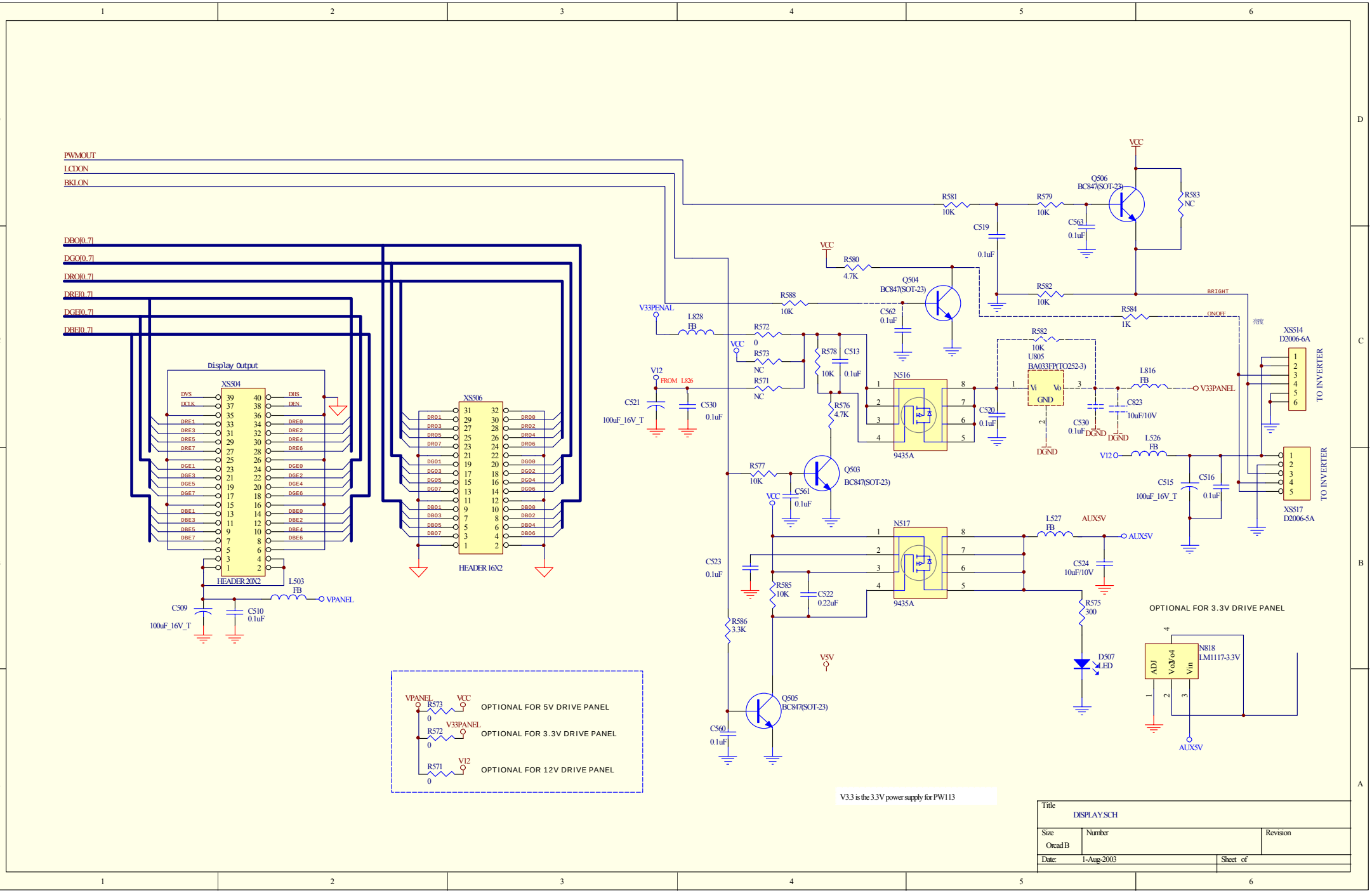
PWMOUT
LCDON
BKLON
DBO[0..7]
DGO[0..7]
DRO[0..7]
DRE[0..7]
DGE[0..7]
DBE[0..7]
Display Output
XS504
HEADER 20X2
XS506
HEADER 16X2
L503
FB
VPANEL
C509
100uF_16V_T
C510
0.1uF
VCC
Q506
BC847(SOT-23)
R581
10K
R579
10K
R583
NC
C519
0.1uF
C563
0.1uF
R580
4.7K
Q504
BC847(SOT-23)
R582
10K
R584
1K
BRIGHT
ONOFF
V33PENAL
L828
FB
R588
10K
C562
0.1uF
R572
0
R573
NC
R571
NC
R578
10K
C513
0.1uF
V12
FROM L826
C521
100uF_16V_T
C530
0.1uF
R576
4.7K
N516
9435A
C520
0.1uF
U805
BA033FP(TO252-3)
Vi
Vo
GND
DGND
L816
FB
V33PANEL
C823
10uF/10V
L526
FB
C515
100uF_16V_T
C516
0.1uF
XS514
D2006-6A
XS517
D2006-5A
TO INVERTER
R577
10K
Q503
BC847(SOT-23)
C561
0.1uF
N517
9435A
L527
FB
AUX5V
C524
10uF/10V
C523
0.1uF
R585
10K
C522
0.22uF
R586
3.3K
R575
300
D507
LED
V5V
Q505
BC847(SOT-23)
C560
0.1uF
OPTIONAL FOR 3.3V DRIVE PANEL
N818
LM1117-3.3V
ADJ
Vout
Vin
OPTIONAL FOR 5V DRIVE PANEL
OPTIONAL FOR 3.3V DRIVE PANEL
OPTIONAL FOR 12V DRIVE PANEL
V3.3 is the 3.3V power supply for PW113
Title
DISPLAY.SCH
Size
Orcad B
Number
Revision
Date:
1-Aug-2003
Sheet of

KLC-TM1508
Analog Board
schematic circuit diagram

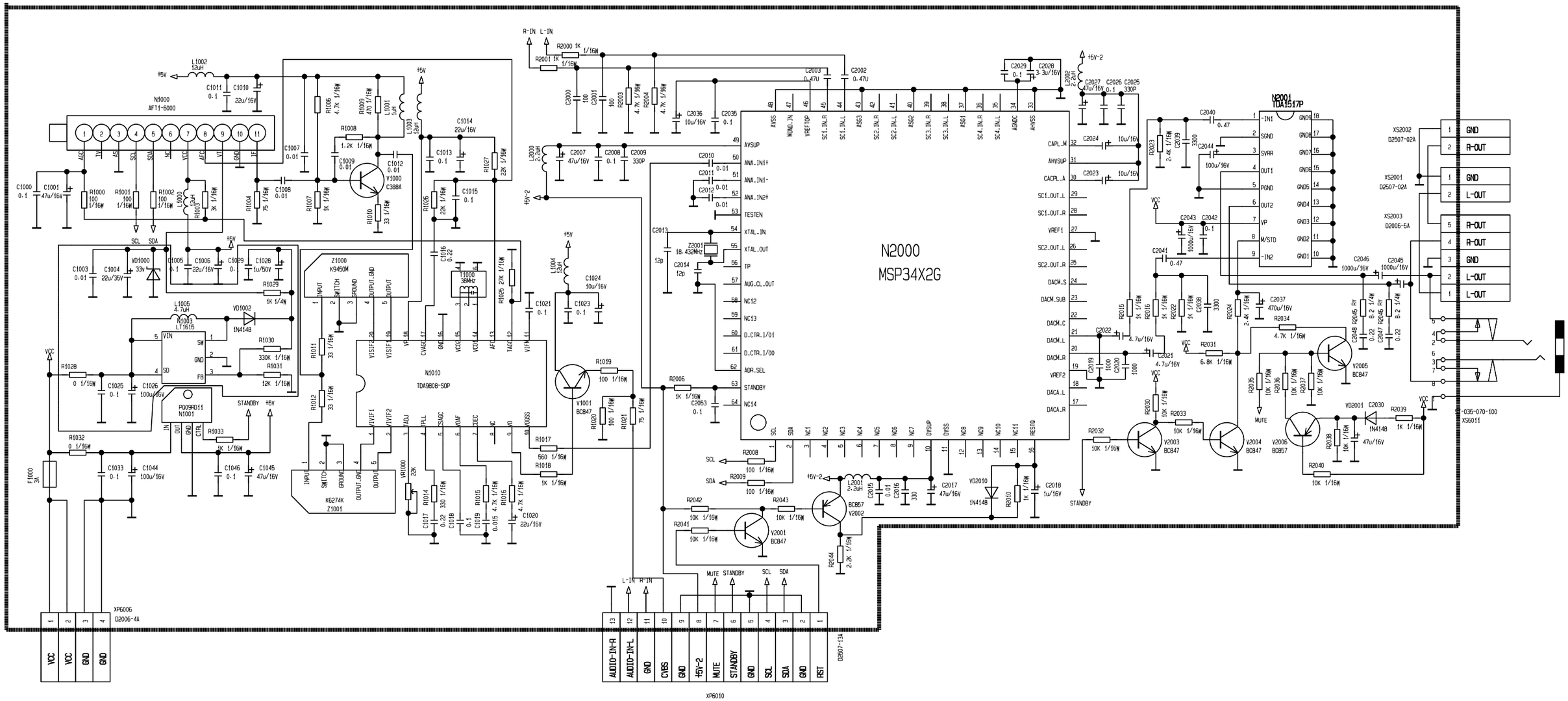

KLC-TM1508
inverter•PCB P/N•35007175• schematic circuit

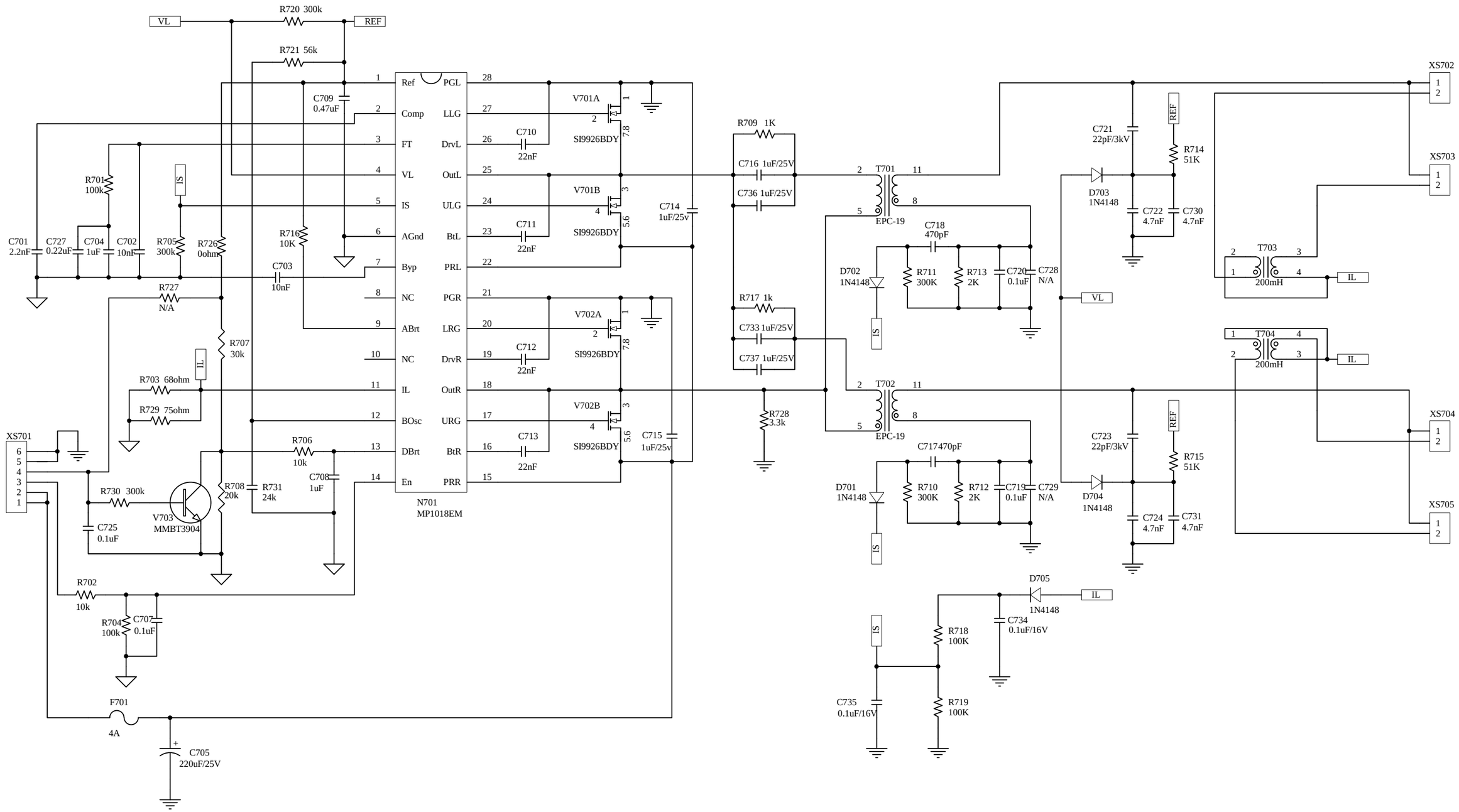

Title		
INV-MP1018		
Size: A3	Number: 1	Revision: A
Date: 9-Oct-2004	Sheet 1 of 1	
	Drawn By:	

KLC-TM1508
Digital Board Top layer

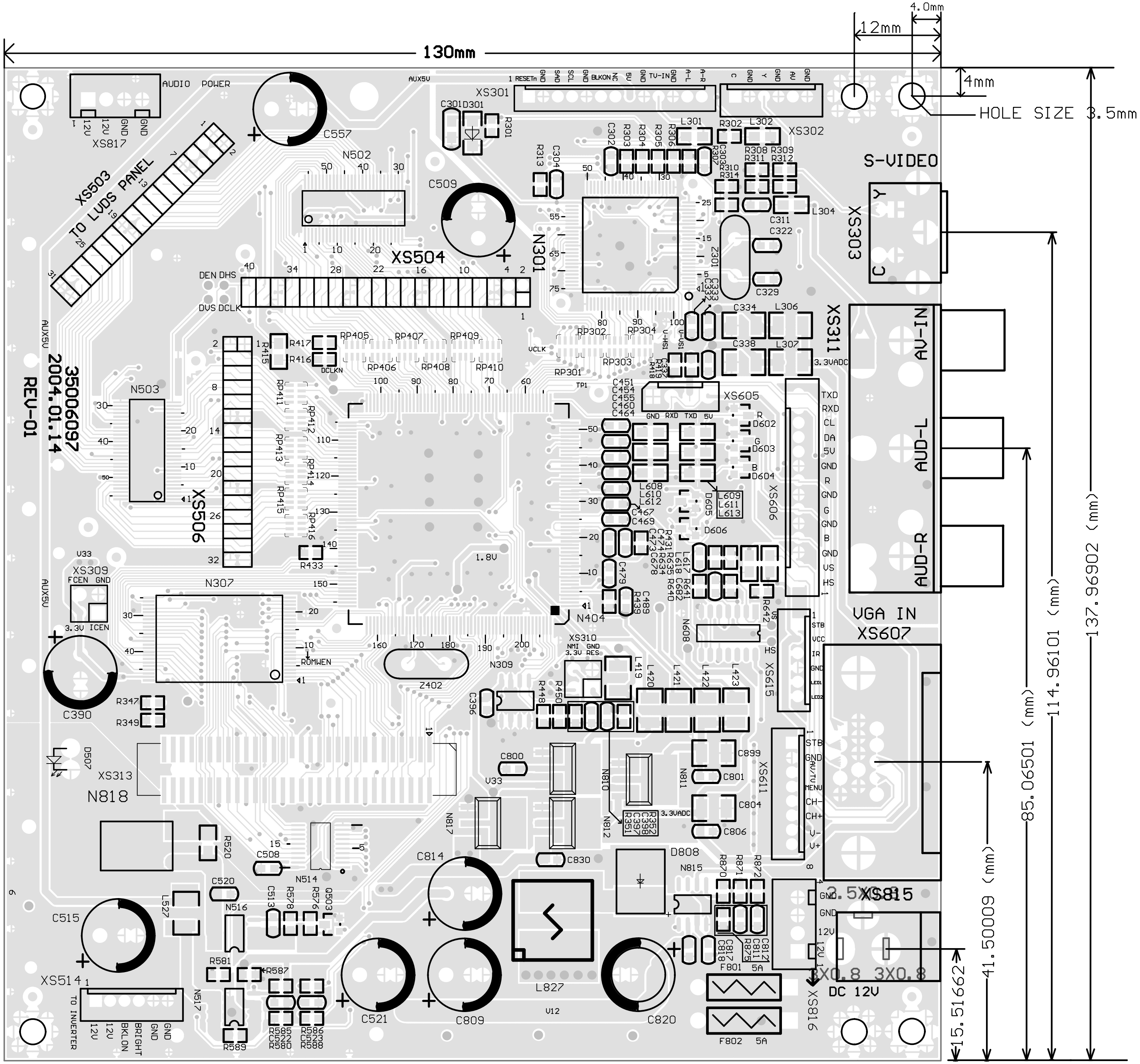

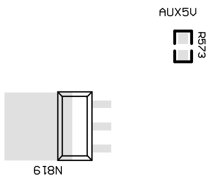

KLC-TM1508
Digital Board Bottom layer

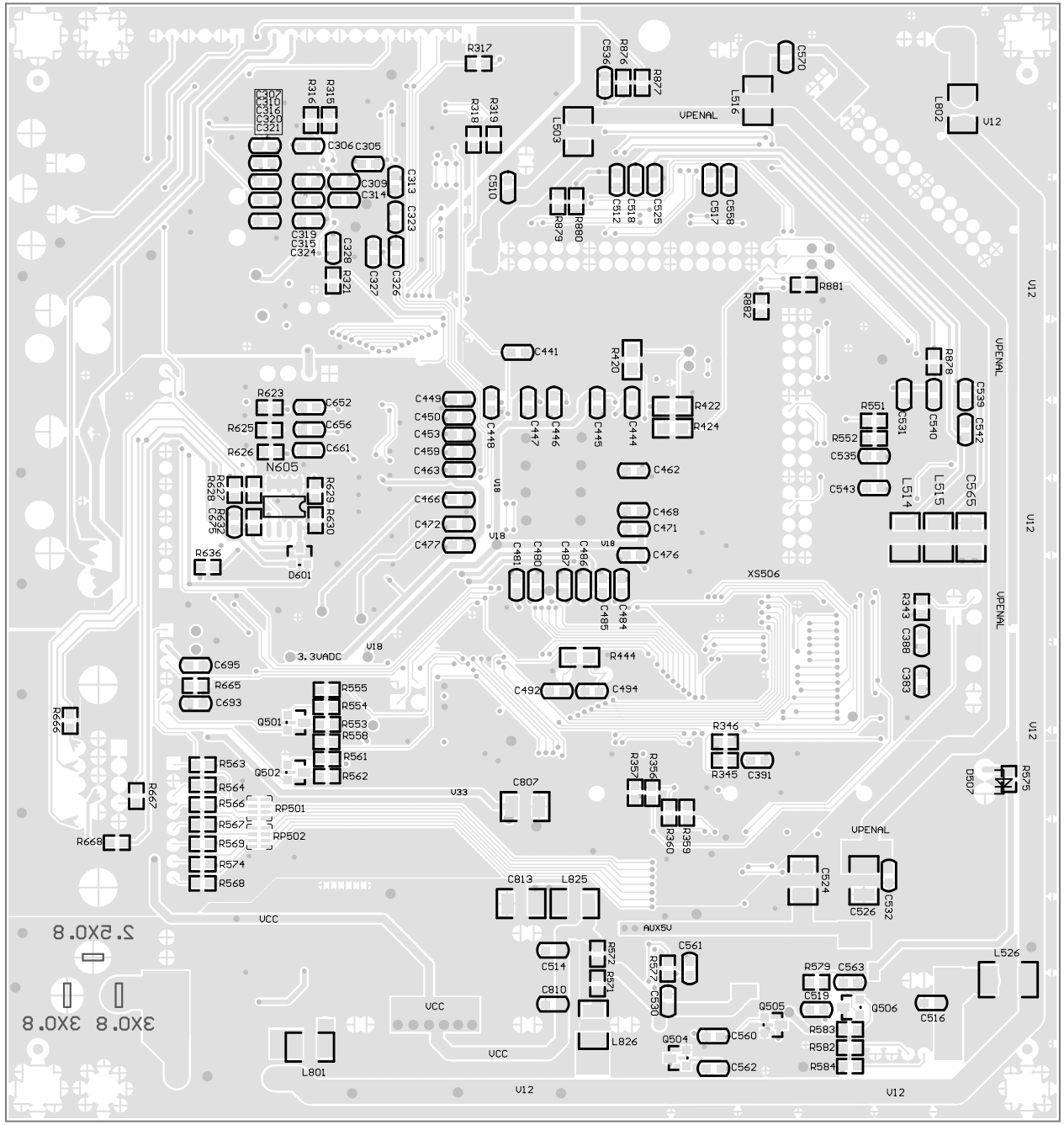

UPENAL

KLC-TM1508 Analog Board Toplayer

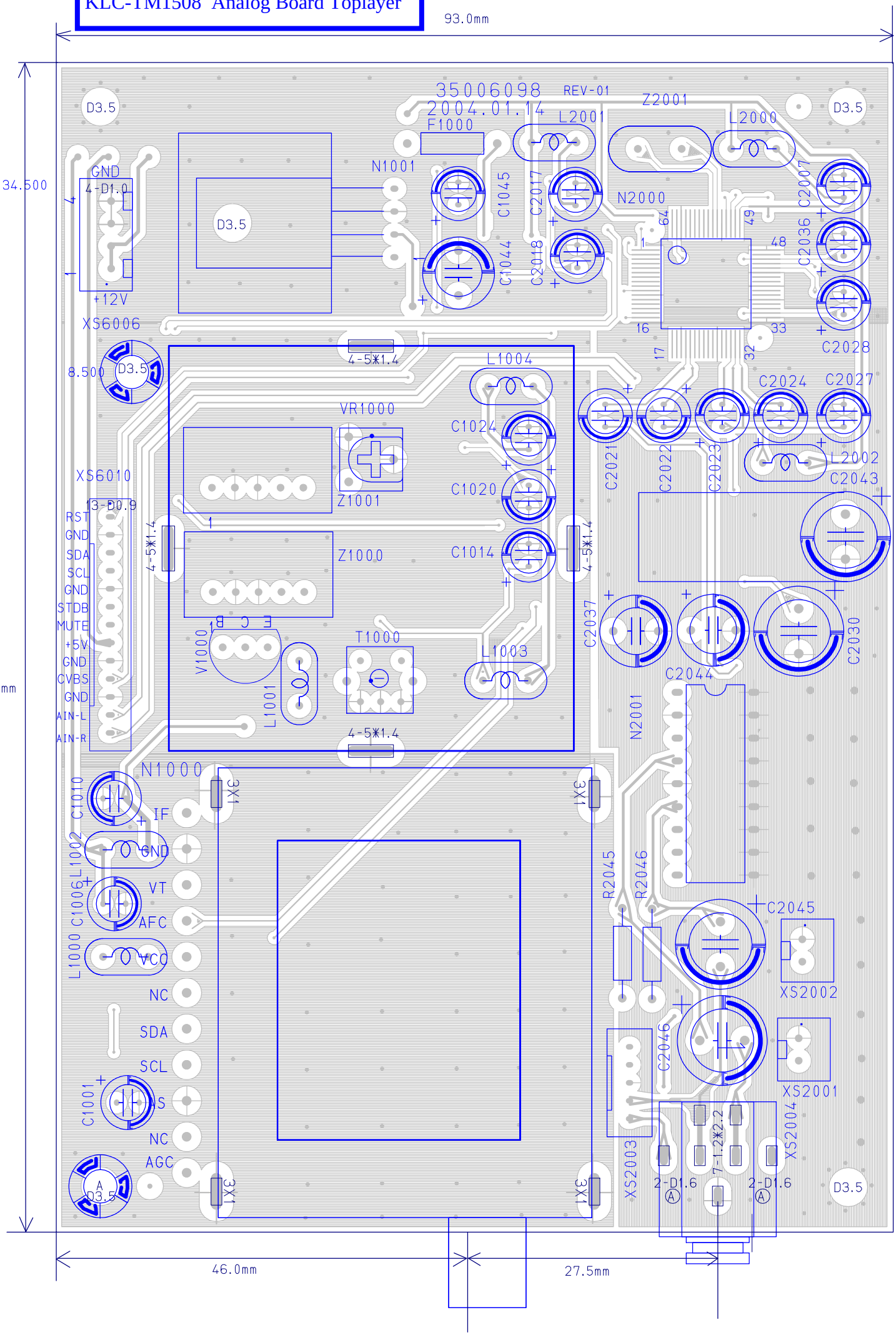

KLC-TM1508 Analog Board Bottomlayer

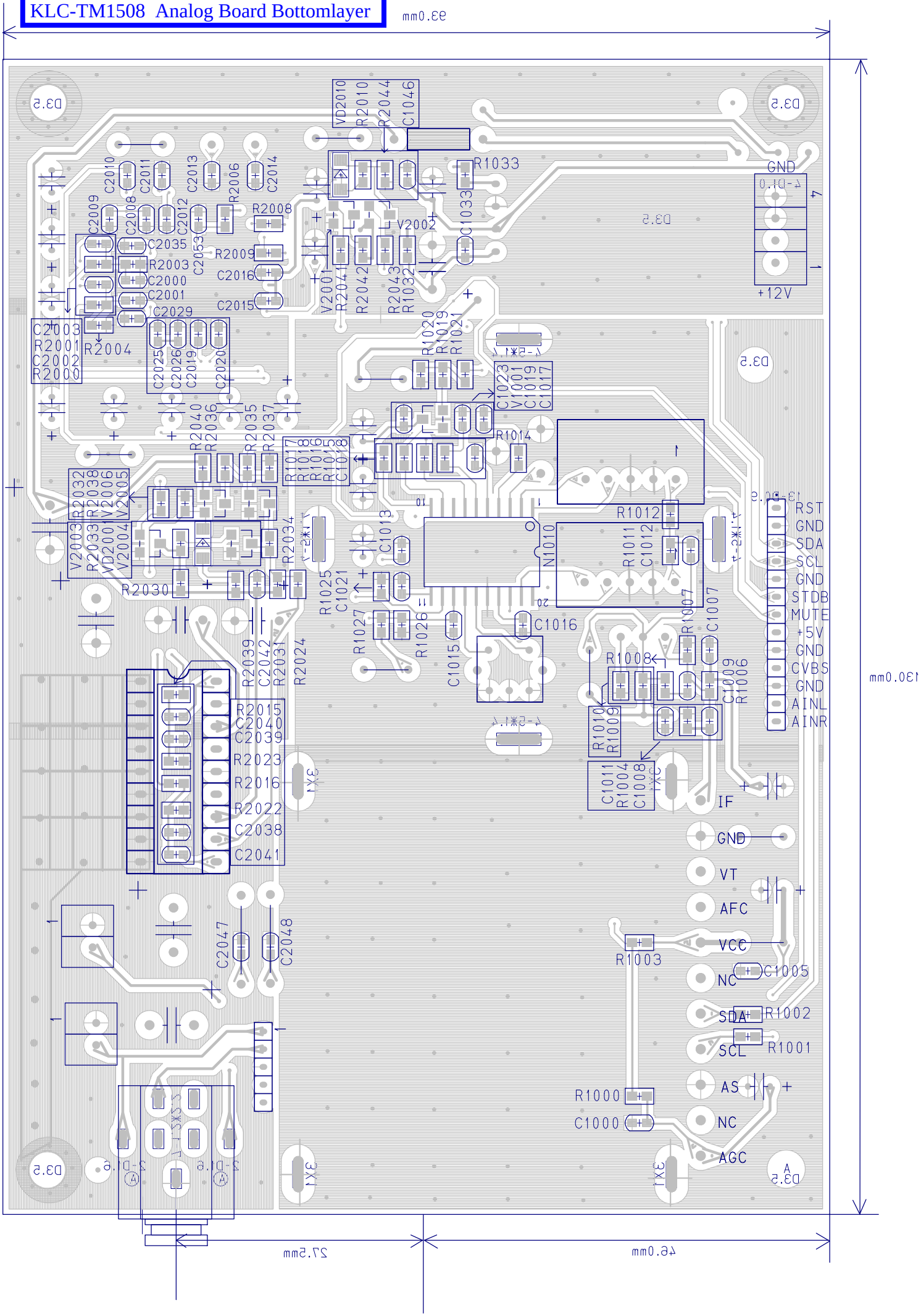

KLC-TM1508
inverter•P/N•34002054•

CUSTOMER:

Emax

Specification

Part Name:	LCD PANEL DC TO AC INVERTER	Page:	1	of	3
Model No:	PLCD0317403 REV:0	Date:	APR. / 24 / 2003		

DIMENSION MEASURE:(UNIT:mm)

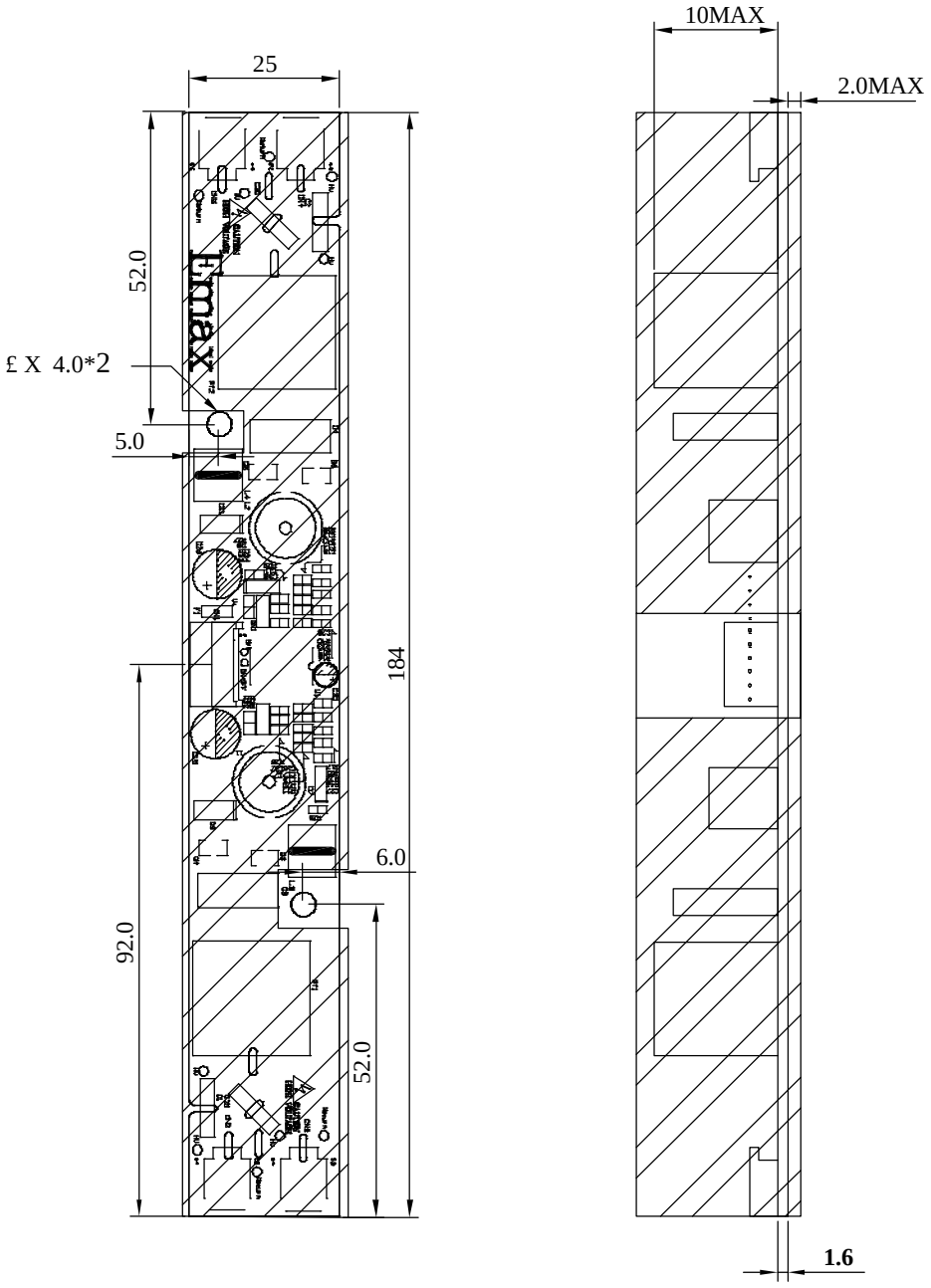

Tolerance:¡ Ó0.15mm

Emax

CUSTOMER:_____

Specification

Part Name:	LCD PANEL DC TO AC INVERTER	Page:	2	of	3
Model No:	PLCD0317403 REV:0	Date:	APR. / 24 / 2003		

TEST CIRCUIT:

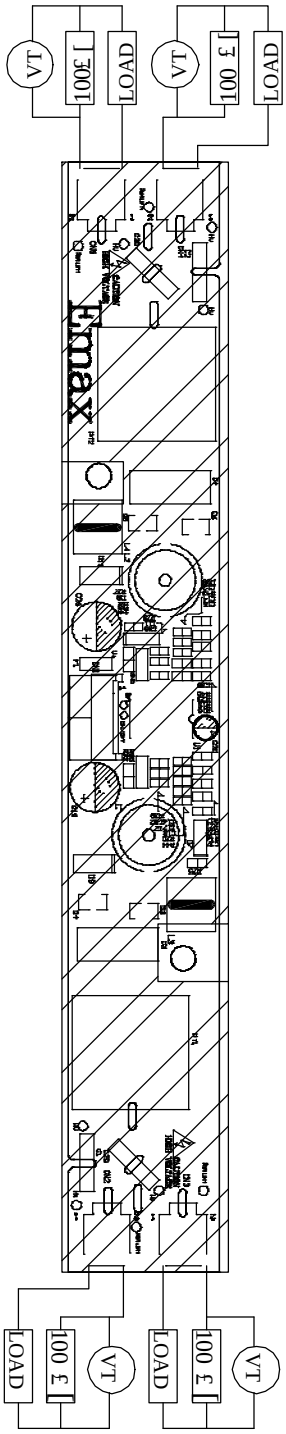

CUSTOMER:_____

Specification

Part Name:	LCD PANEL DC TO AC INVERTER	Page:	3	of	3
Model No:	PLCD0317403 REV:0	Date:	APR. / 24 / 2003		

LAYOUT DRAWING:

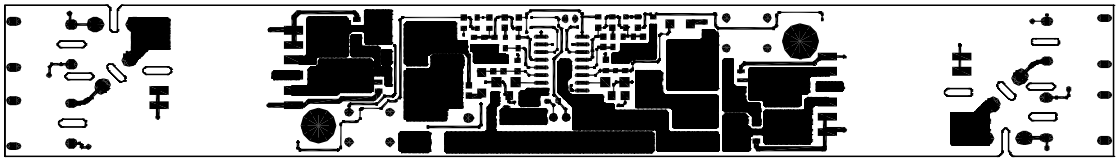

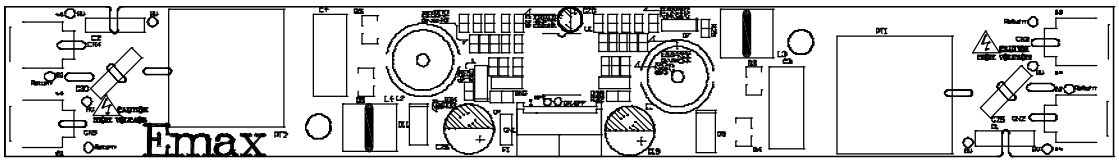

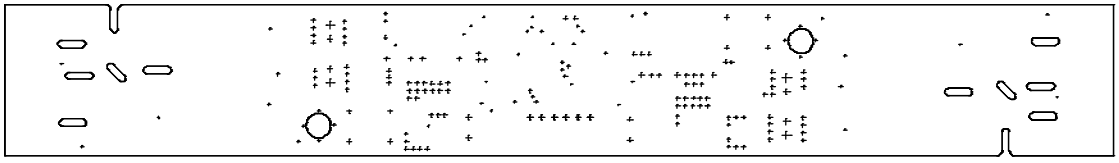

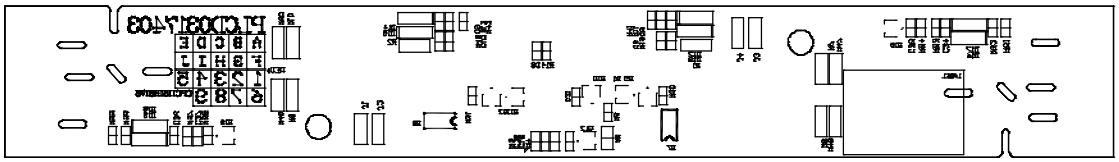

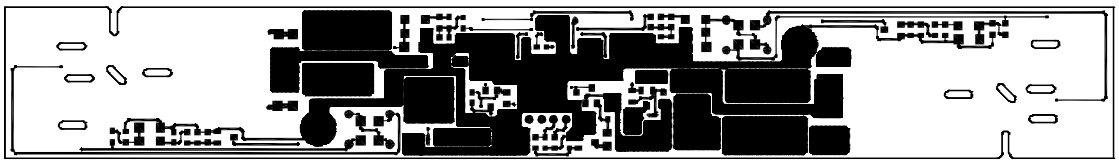

CUSTOMER:_____ Emax

Specification

Part Name:	LCD PANEL DC TO AC INVERTER	Page:	1	of	2
Model No:	PLCD0317403	Date:	APR./ 24/ 2003		

			MAKER	UL No.
C20	22uF/16V(FP1451 or TL1451 or 2.2uF/50V(BA9741 or AT1741S)	1	TEAPO,SANYO,HER MEI,FUHJYYU	
C5,C9,C14,C15,C16,C17,C18,C21,C25,C32,C33,C35,C37	104/50V,0603	13	TDK,PHILIPS	
C3,C4	154/250V	2	ARCOTRONICS,TAI YANG(7Q)(7C)	
C6,C10,C27,C28	105/16V,0603	4	TDK,PHILIPS	
C34,C36	102/50V,0603	2	TDK,PHILIPS	
C8	470/50V,0603	1	TDK,PHILIPS	
C19,C26	150uF/25V	2	SANYO,HER MEI,TEAPO	
C1,C2,C29,C30	22pF/3KV,DIP	4	TDK,PHILIPS	
CN1	2001J-06-RT(ORICH) S6B-PH-KL(JST) JH2-22-0648	1	ORICH,JST,FCN	E201214 E60389 E41871
CN2,CN3,CN4,CN5	SM02B-BHSS-1-TB(JST) 87210-0208(ACES) W01-01100-0228	4	JST,ACES,FCN	E60389 E205655 E201214
D12,D13,D14,D15,D16,D17,D18,D19	RLS4148	4	ROHM,YING,TS,MMC	
D9,D11	SK24 or 2A/40V	2	ROHM,YING,TS,MMC	
D7,D8	ZENER 13V	2	ROHM,YING,TS,MMC	
R1,R2	1K ,1206, 1%	2	YAGEO,SYNTON-TECH, LIKET,EVER OHMS,TA-I	
R6	100K ,0603	1	YAGEO,SYNTON-TECH, LIKET,EVER OHMS,TA-I	
R28,R29	75K ,0603	2	YAGEO,SYNTON-TECH, LIKET,EVER OHMS,TA-I	
R3	3.6K ,0603	1	YAGEO,SYNTON-TECH, LIKET,EVER OHMS,TA-I	
R11,R12	11K ,0603, 1%	2	YAGEO,SYNTON-TECH, LIKET,EVER OHMS,TA-I	
R19,R21	510 ,0603	2	YAGEO,SYNTON-TECH, LIKET,EVER OHMS,TA-I	
R16,R17,R18,R20	20K ,0603	4	YAGEO,SYNTON-TECH, LIKET,EVER OHMS,TA-I	
R34,R35	560 ,1206	2	YAGEO,SYNTON-TECH, LIKET,EVER OHMS,TA-I	
R13,R45	1.5K ,0603, 1%	2	YAGEO,SYNTON-TECH, LIKET,EVER OHMS,TA-I	
R4,R30,R31,R51,R52,R55,R56	1M ,0603	7	YAGEO,SYNTON-TECH, LIKET,EVER OHMS,TA-I	
R5	56K ,0805	1	YAGEO,SYNTON-TECH, LIKET,EVER OHMS,TA-I	

Approved	Cheched	Design	Draw

CUSTOMER:_____ Emax

Specification

Part Name:	LCD PANEL DC TO AC INVERTER	Page:	2	of	2
Model No:	PLCD0317403	Date:	APR／24／2003		

			MAKER	UL No.
R32,R33	1.2K ,0805	2	YAGEO,SYNTON-TECH, LIKET,EVER OHMS,TA-1	
R41,R42	5.1K ,0603, 1%	2	YAGEO,SYNTON-TECH, LIKET,EVER OHMS,TA-1	
R25,R27	30K ,0603	2	YAGEO,SYNTON-TECH, LIKET,EVER OHMS,TA-1	
R54,R58	47K ,0603	2	YAGEO,SYNTON-TECH, LIKET,EVER OHMS,TA-1	
R40,R46	36K ,0603, 1%	2	YAGEO,SYNTON-TECH, LIKET,EVER OHMS,TA-1	
R53,R57	5.1M ,0603	2	YAGEO,SYNTON-TECH, LIKET,EVER OHMS,TA-1	
R14	10K ,0603(FP1451 or TL1451)or 13K ,0603(BA9741 or AT1741S)	1	YAGEO,SYNTON-TECH, LIKET,EVER OHMS,TA-1	
R47,R48,R49,R50	910 ,1206	4	YAGEO,SYNTON-TECH, LIKET,EVER OHMS,TA-1	
Q1,Q2,Q15,Q16	SST2222A	4	ROHM,AUK	
Q3,Q4,Q5,Q6	2SC4672	4	ROHM,AUK	
Q7,Q8	NDS9435A or AO4403 or SDM9435A or AP9435M	2	CET,AO,SMC,Advanced Power.	
Q9,Q10,Q11	SST2907A	3	ROHM,AUK	
Q12	RK7002	1	ROHM,AUK	
L1,L2	EDI0005	2	EMAX	
L3,L4	ELF0002	2	EMAX	
F1	429003(Littelfuse) 3216FF-3A(Bussmann) 1206FA3A(SkyGate) KE32(Daito) BA100-3A(SAVE)	1	LITTEL,BUSSMANN, SKY GATE, Daito,SAVE	E10480 E19180(N) E195833 E59783 E146895
U1	BA9741 or FP1451 or TL1451 or AT1741S	1	ROHM,FEELING,TI,AIMT RON	
PCB	CPC1151R6176 PLCD1717408	1	CHIAN YOU,HANT GIST, YUMMON,TONG JIANG, CENTURY,WAN ZHENG ,EISO, TUNG TA	E112804(S) E177794 E168218(S) E201363 E189010(M) E211670 E162061(S) E162886
PT1,PT2	EST0015,EPC-19	2	EMAX	
MYLAR	MLTG184*104*0.188mT	1	GARWARE,TORAY	E110983(M) E86511(M)
EVA	EVA 10*13*2mm	2	GARWARE,TORAY	

Approved	Cheched	Design	Draw

KLC-TM1508 P/N•34002054
PLCD0317403

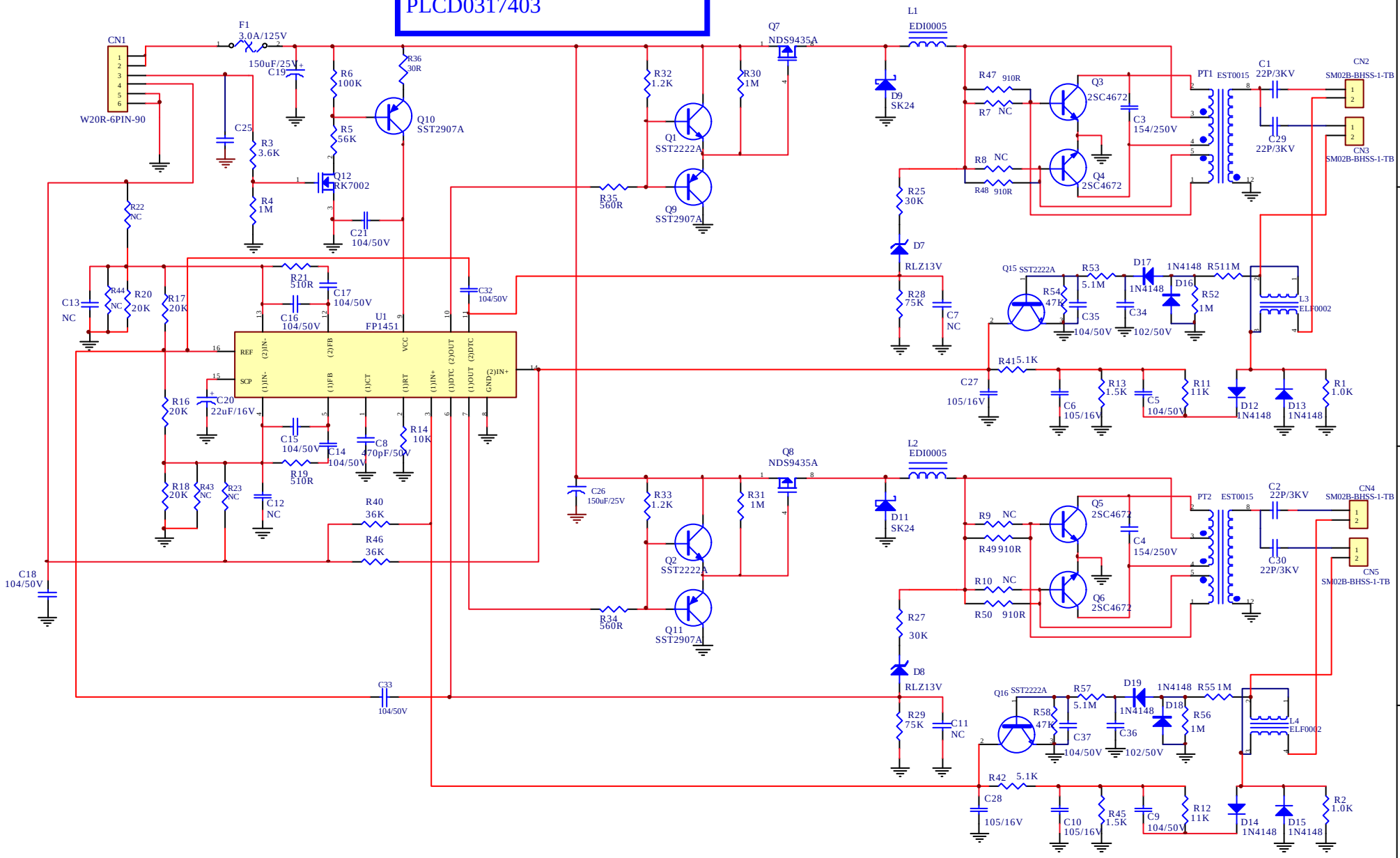

PLCD0317403

Title		
Size A3	Number	Revision
Date: 29-Apr-2003	Sheet of	
	Drawn By:	

KLC-TM2018 Digital Schematic

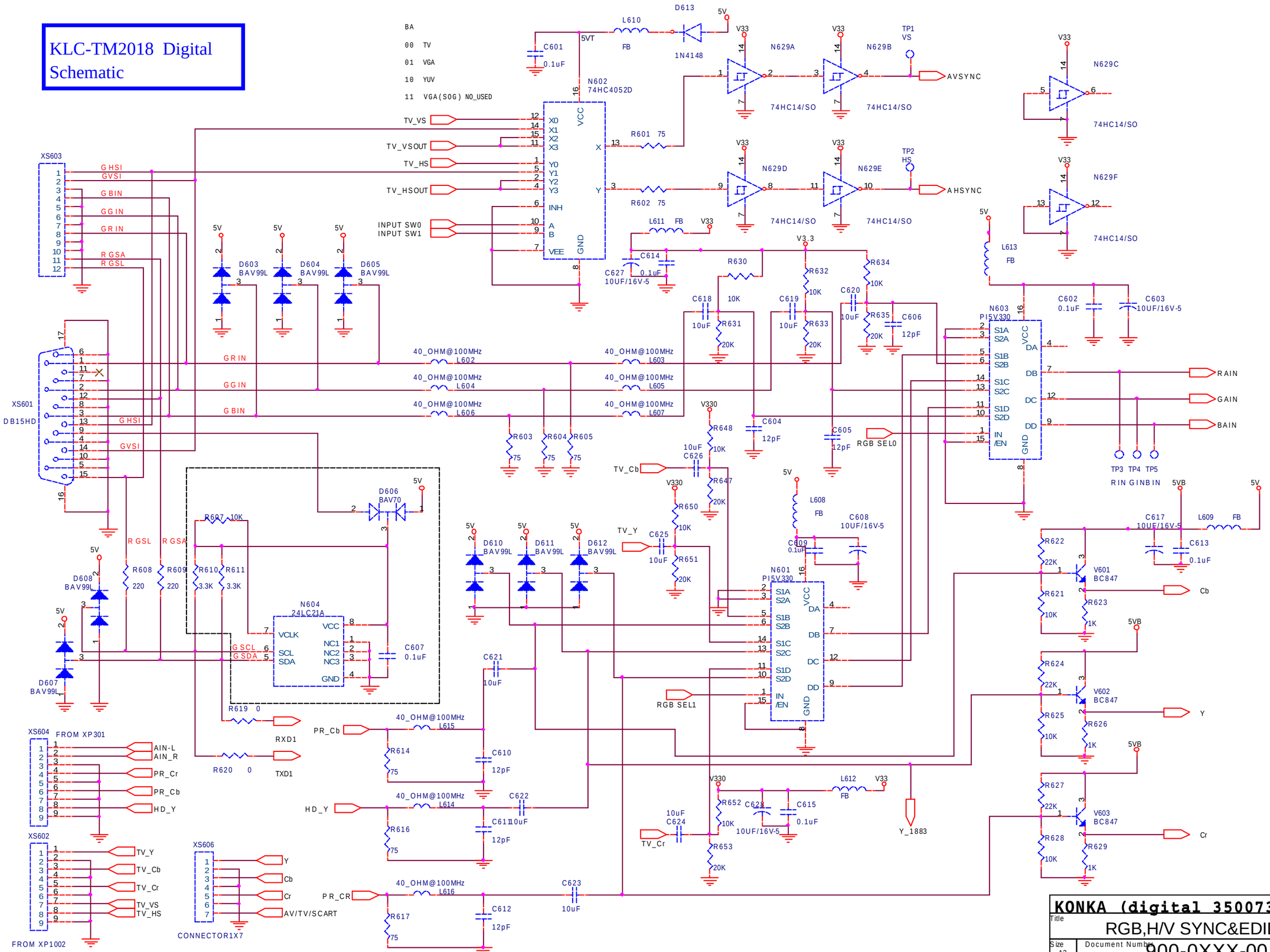

KONKA (digital 35007335)	
Title	RGB,H/V SYNC&EDID
Size A3	Document Number 900-0XXX-00
Rev A	
Date: Thursday, September 16, 2004	Sheet 2 of 11

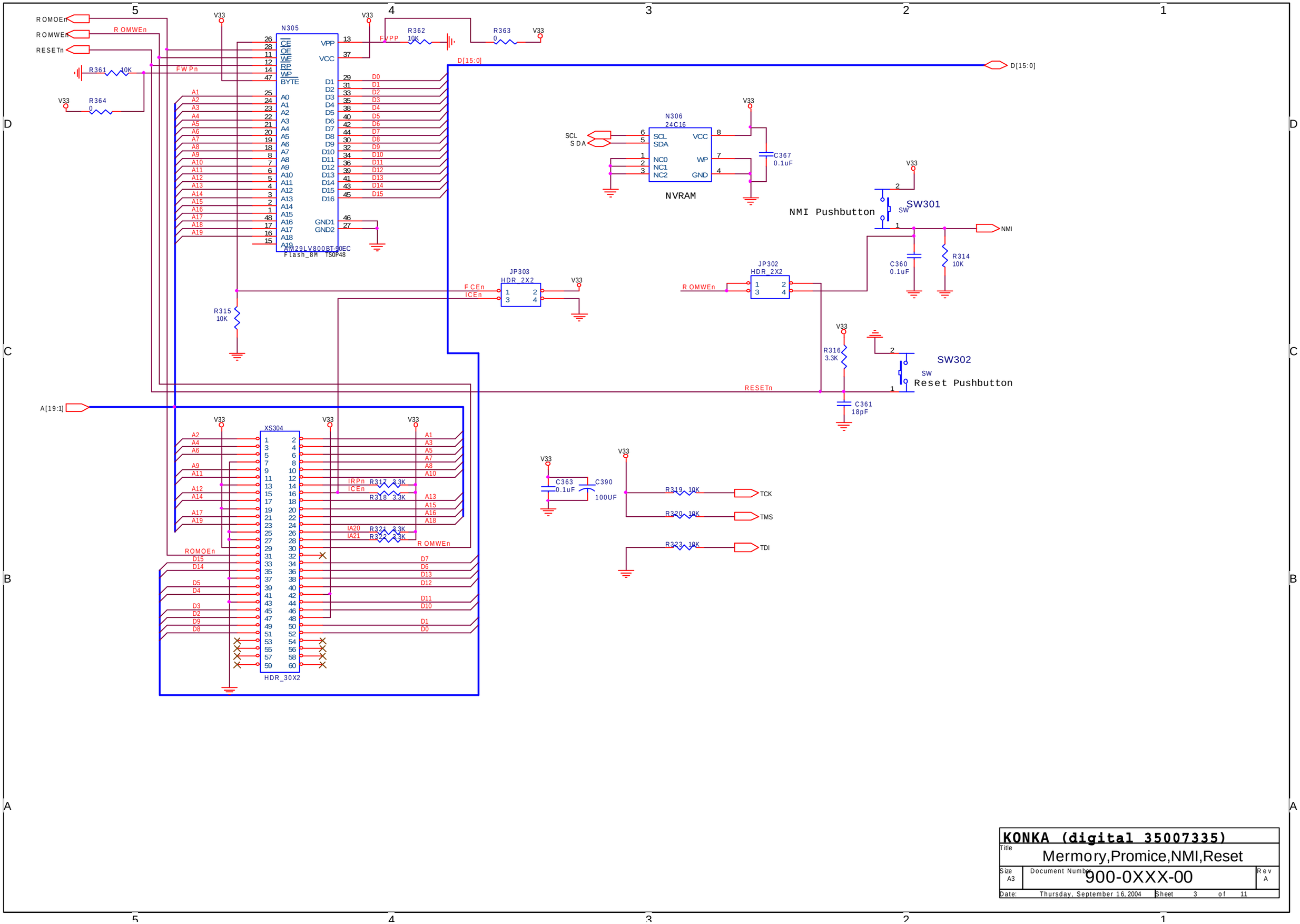

KONKA (digital 35007335)	
Title	Mermory,Promice,NMI,Reset
Size A3	Document Number 900-0XXX-00 Rev A
Date: Thursday, September 16, 2004	Sheet 3 of 11

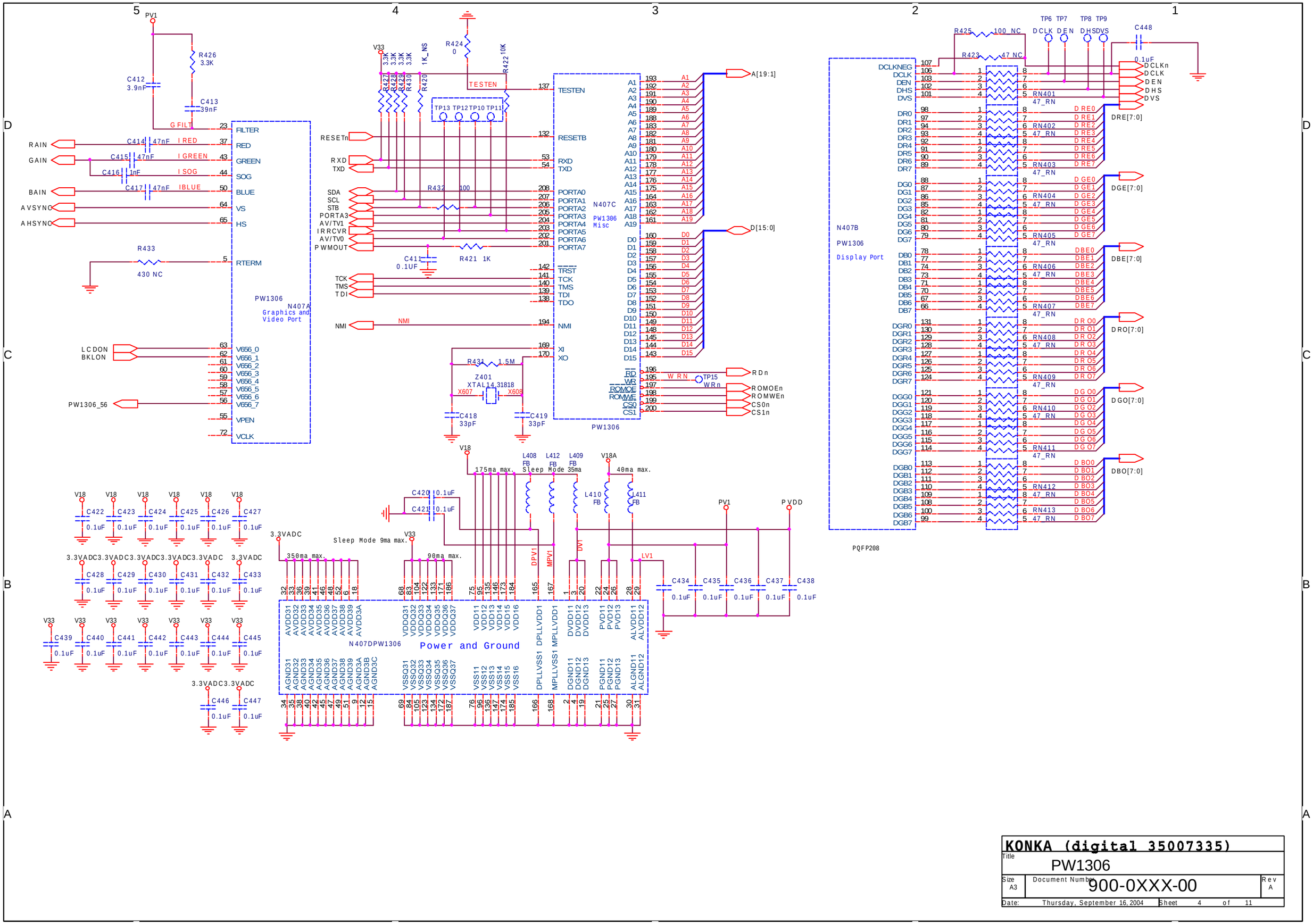

KONKA (digital 35007335)			
Title	PW1306		
Size A3	Document Number 900-0XXX-00		Rev A
Date: Thursday, September 16, 2004	Sheet 4 of 11		

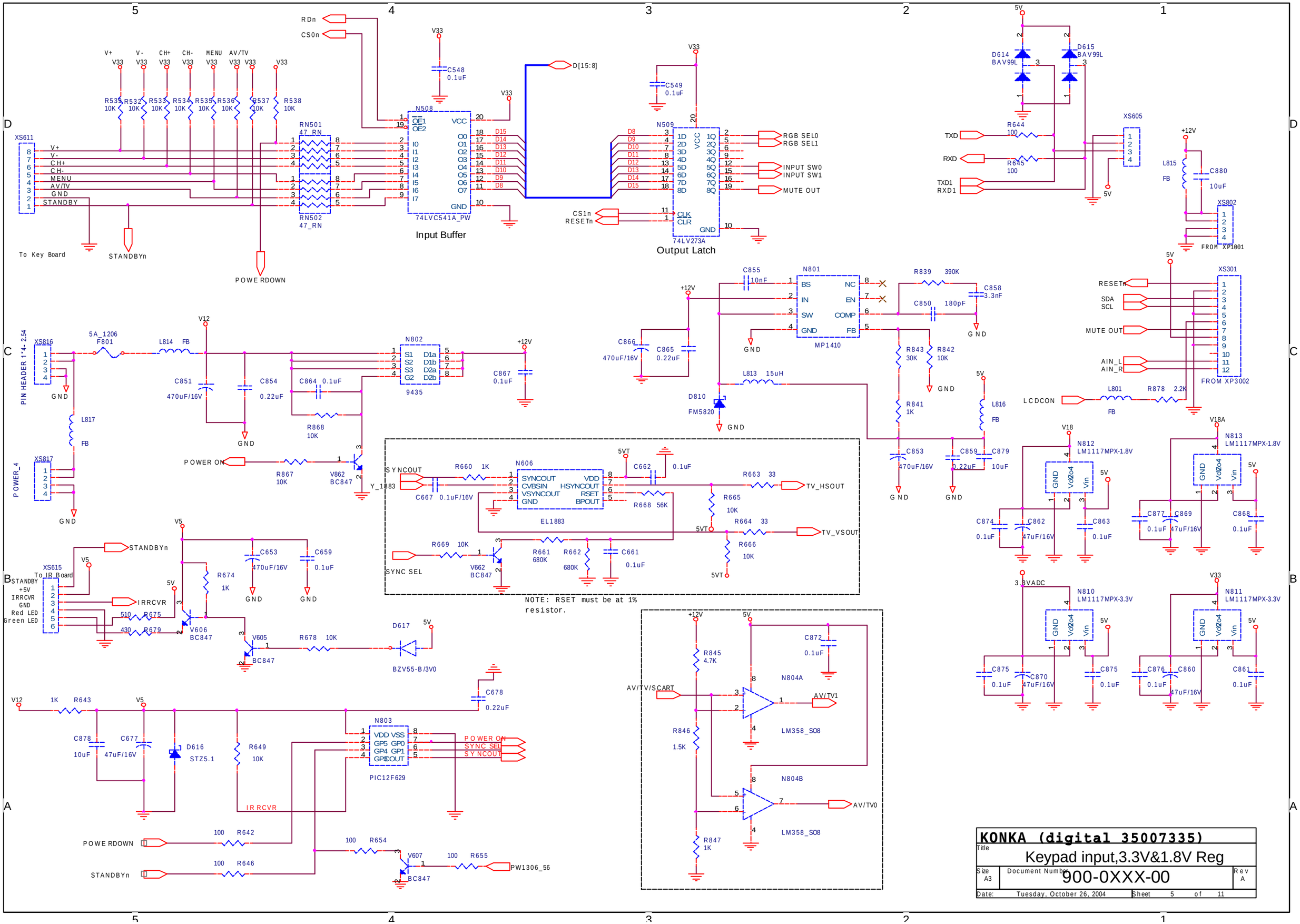

KONKA (digital 35007335)	
Title	Keypad input,3.3V&1.8V Reg
Size A3	Document Number 900-0XXX-00
Rev A	
Date: Tuesday, October 26, 2004	Sheet 5 of 11

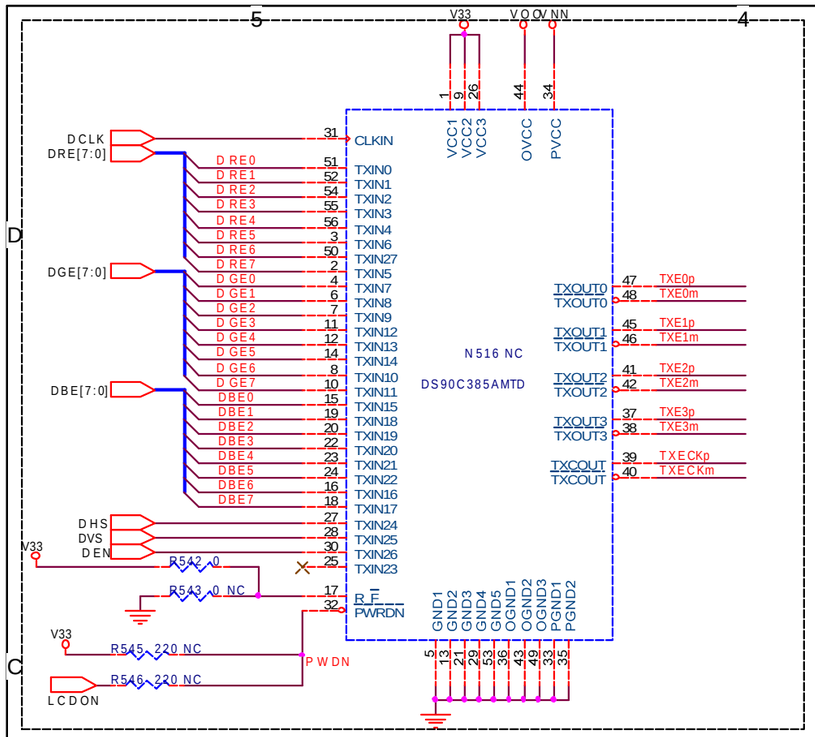

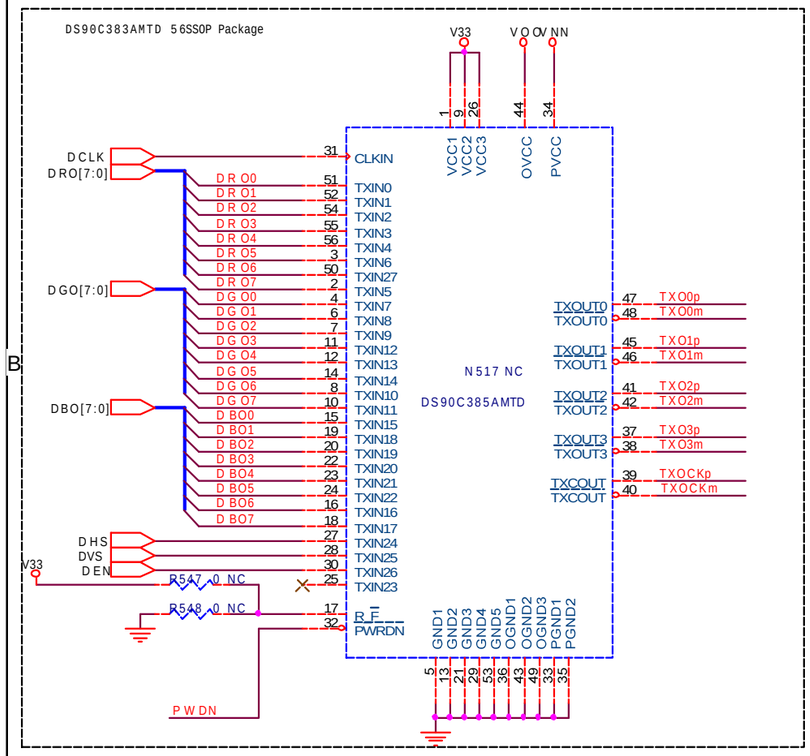

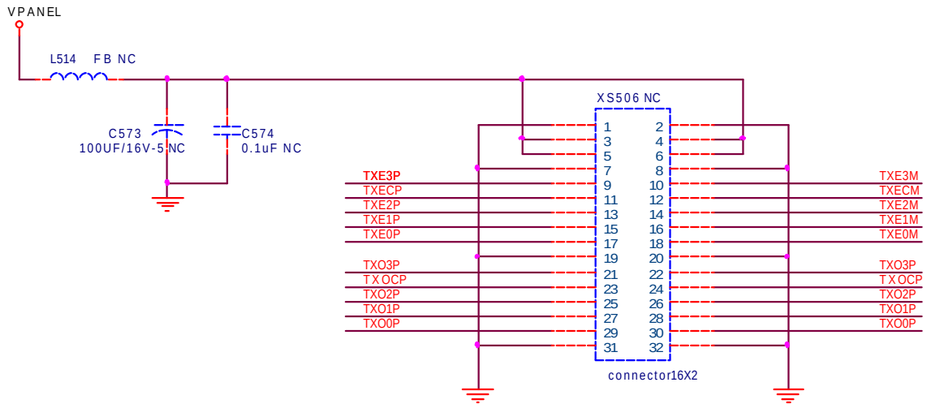

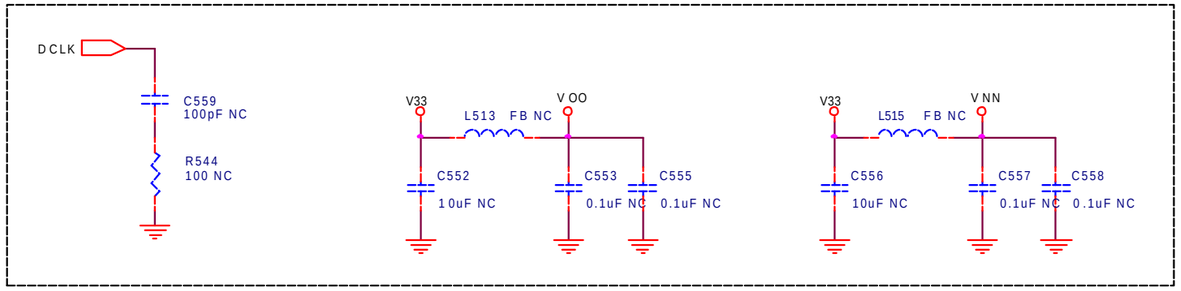

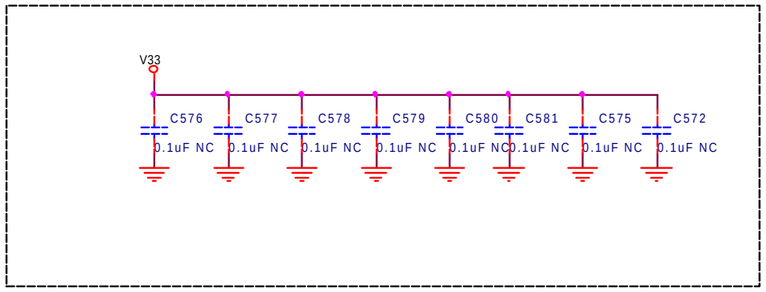

KONKA (digital 35007335)		
Title: LVDS Transmitters		
Size: A3	Document Number: 900-0XXX-00	Rev: A
Date: Thursday, September 16, 2004	Sheet 6 of 11	

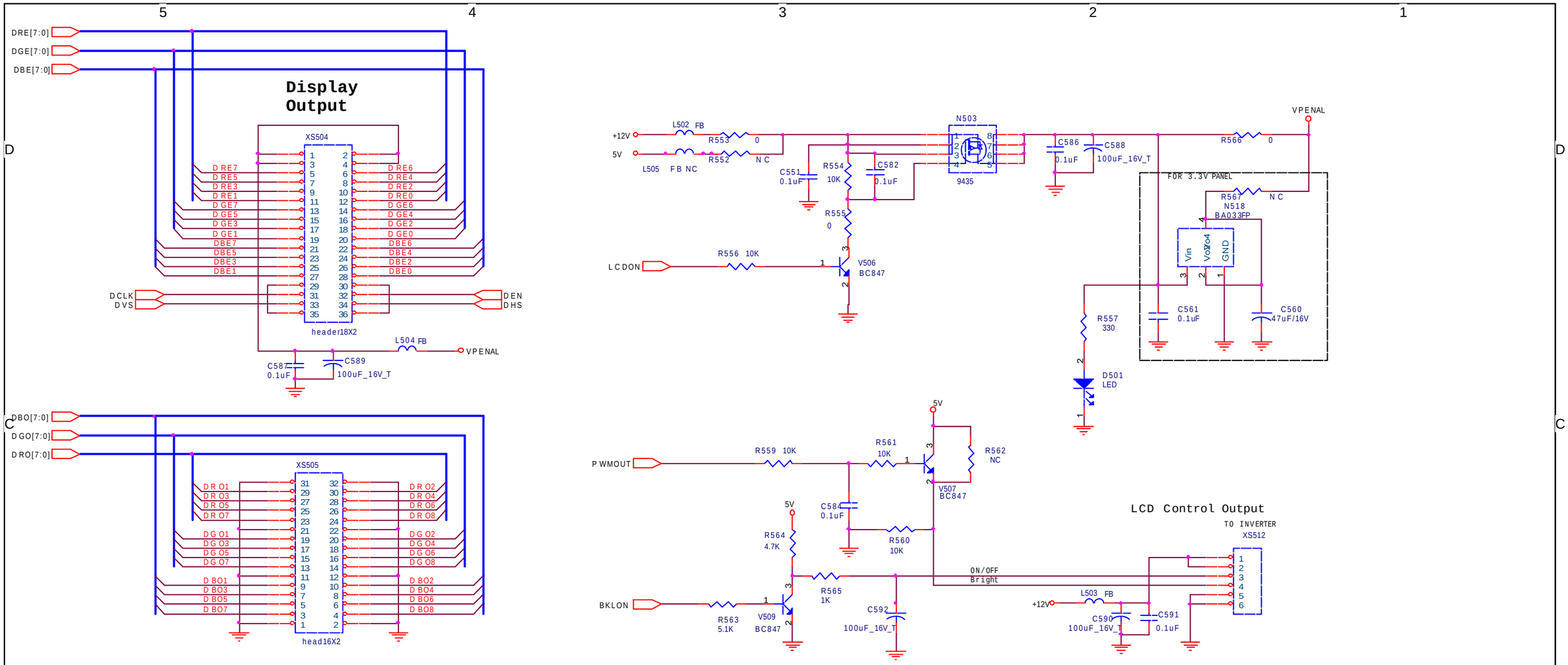

KONKA (digital 35007335)		
Title: Output Connector		
Size: A3	Document Number: 900-0XXX-00	Rev: A
Date: Thursday, September 16, 2004	Sheet 7 of 11	

KLC-TM2018 Analog Board Schematic

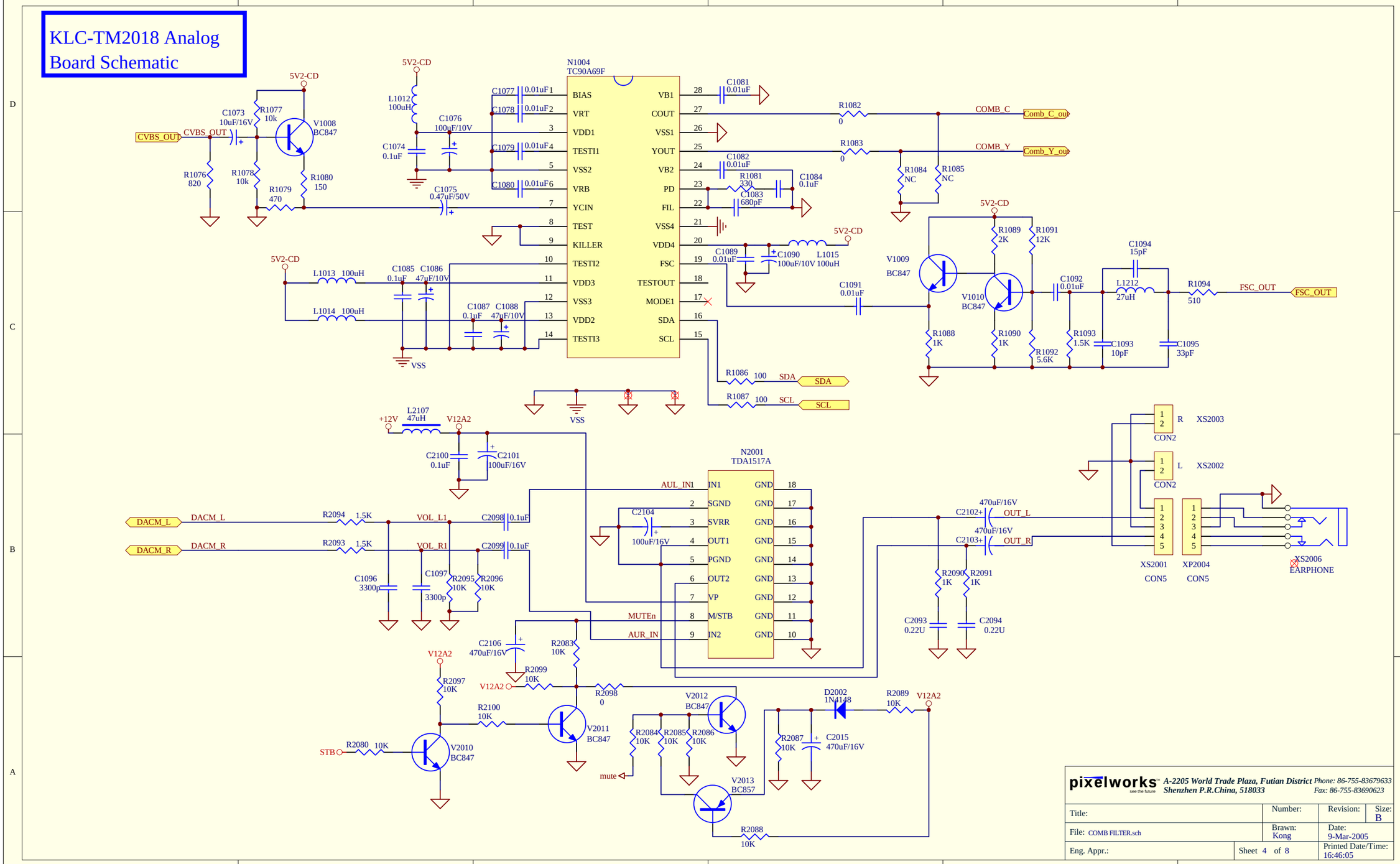

pixelworks see the future
A-2205 World Trade Plaza, Futian District Shenzhen P.R.China, 518033
Phone: 86-755-83679633
Fax: 86-755-83690623

Title:	Number:	Revision:	Size: B
File: COMB FILTER.sch	Brawn: Kong	Date: 9-Mar-2005	
Eng. Appr.:	Sheet 4 of 8	Printed Date/Time: 16:46:05	

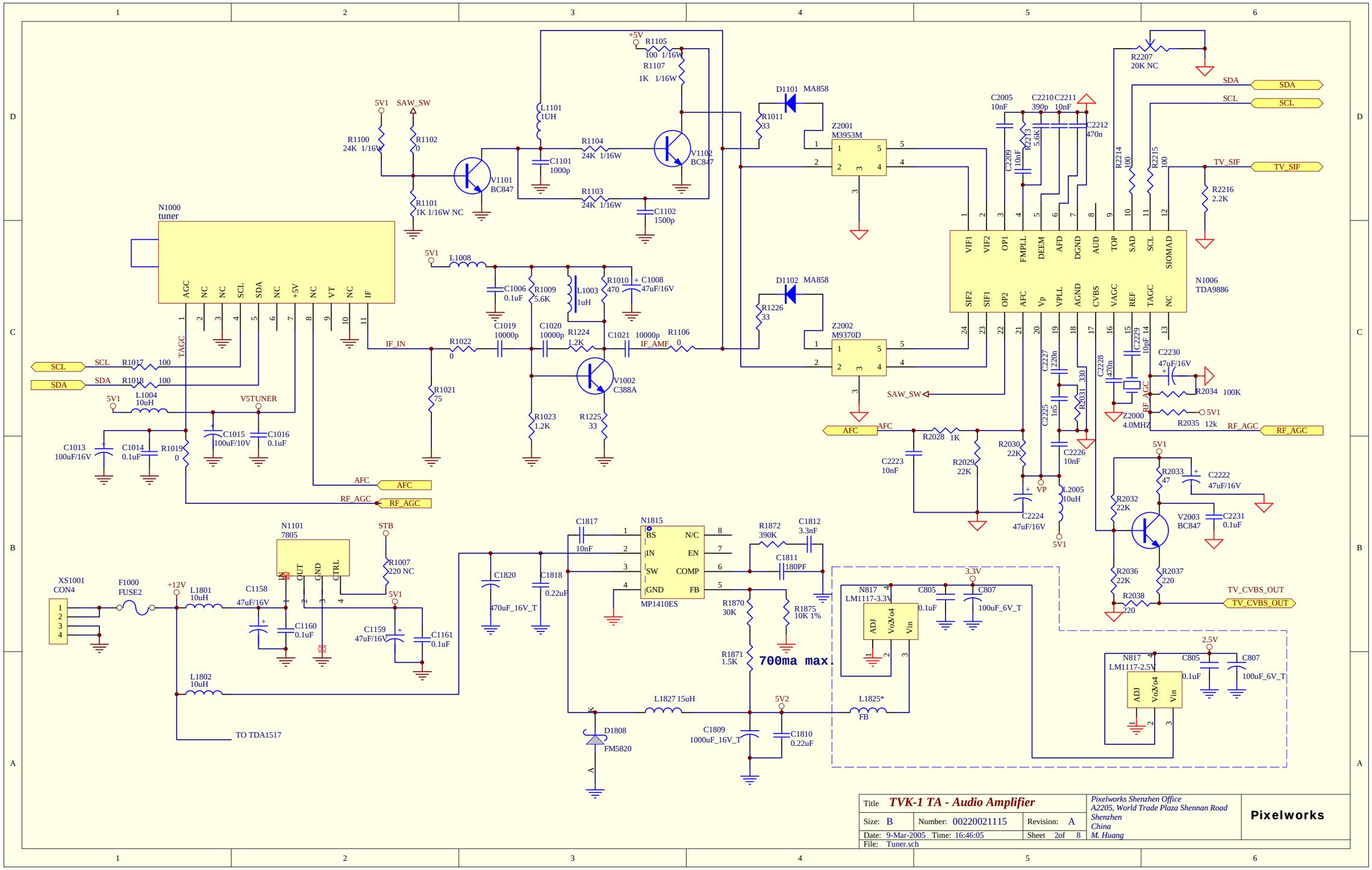

Title	*TVK-1 TA - Audio Amplifier*		*Pixelworks Shenzhen Office* *A2205, World Trade Plaza Shennan Road* *Shenzhen* *China* *M. Huang*
Size: B	Number: 00220021115	Revision: A	
Date: 9-Mar-2005 Time: 16:46:05		Sheet 2of 8	
File: Tuner.sch			

Pixelworks

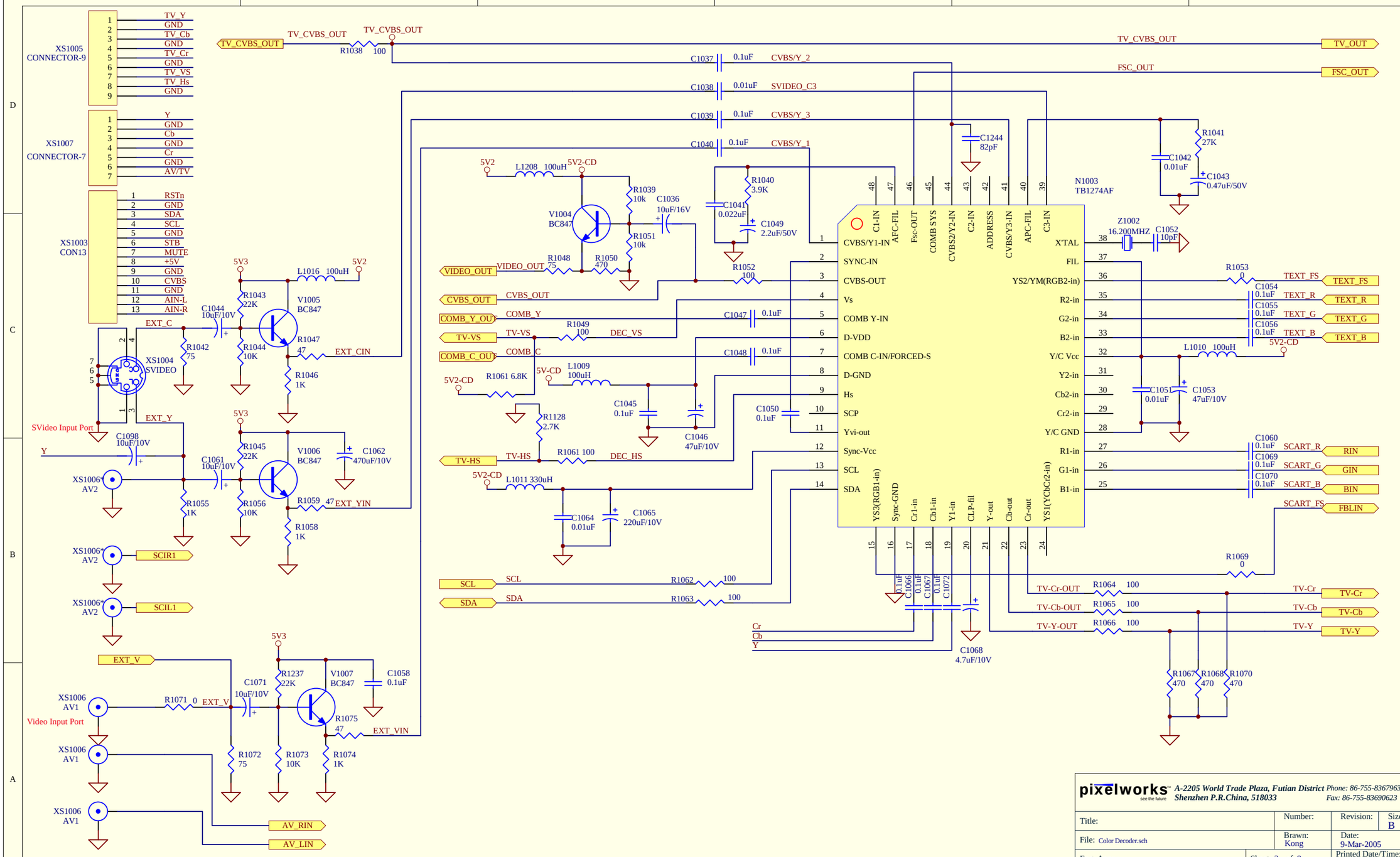

pixelworks see the future
A-2205 World Trade Plaza, Futian District
Shenzhen P.R.China, 518033
Phone: 86-755-83679633
Fax: 86-755-83690623

Title:	Number:	Revision:	Size: B
File: Color Decoder.sch	Brawn: Kong	Date: 9-Mar-2005	
Eng. Appr.:	Sheet 3 of 8	Printed Date/Time: 16:46:06	

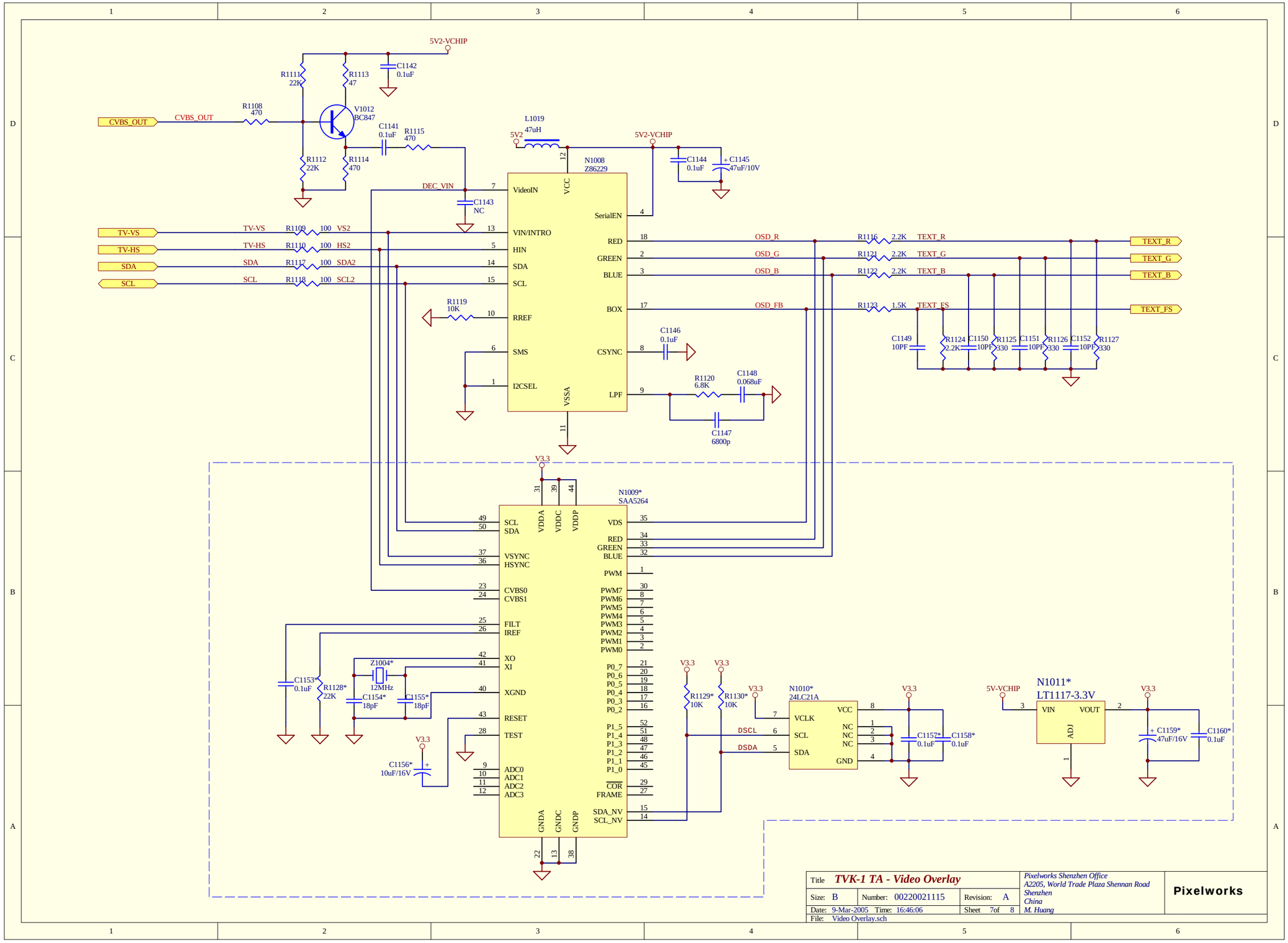

Title	*TVK-1 TA - Video Overlay*		*Pixelworks Shenzhen Office* *A2205, World Trade Plaza Shennan Road* *Shenzhen* *China* *M. Huang*
Size: B	Number: 00220021115	Revision: A	**Pixelworks**
Date: 9-Mar-2005 Time: 16:46:06		Sheet 7of 8	
File: Video Overlay.sch			

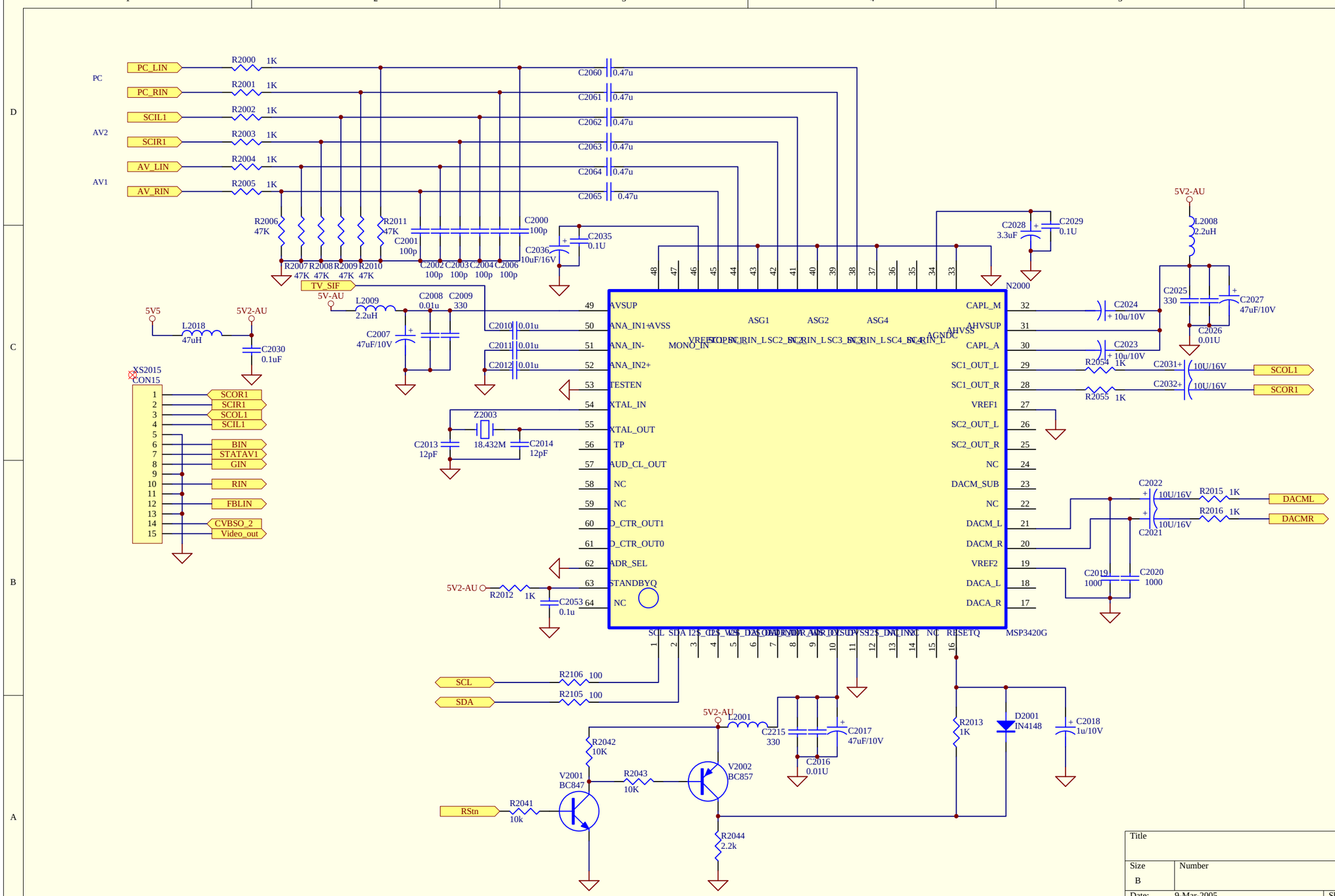

Title		
Size B	Number	Revision
Date: 9-Mar-2005	Sheet of	
File: Y:\公共文件\凌云\tunner7336sch.DDB	Drawn By:	

KEY BOARD 35007419

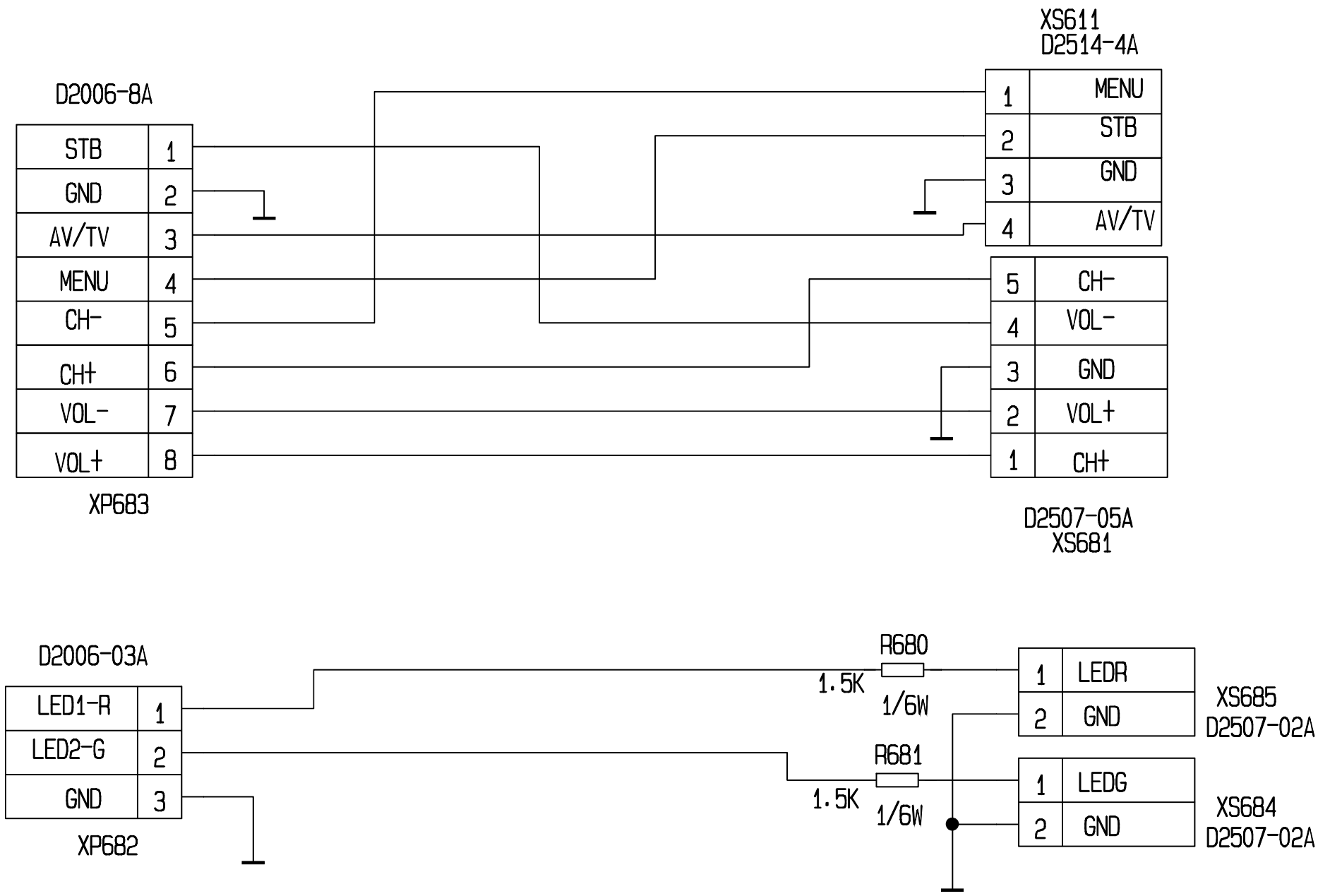

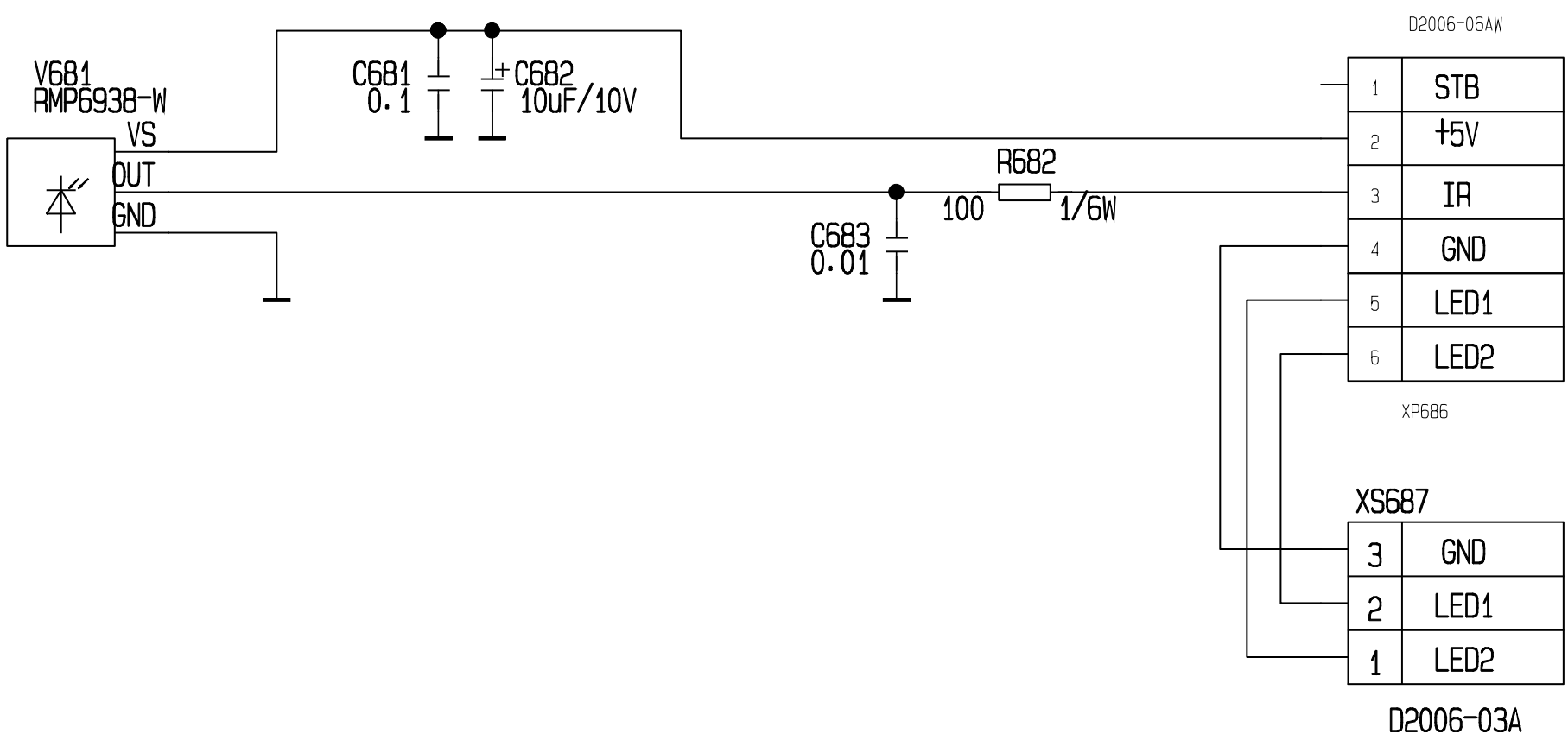

REC BOARD 35007418

KLC-TM2018 POWER Board Schematic

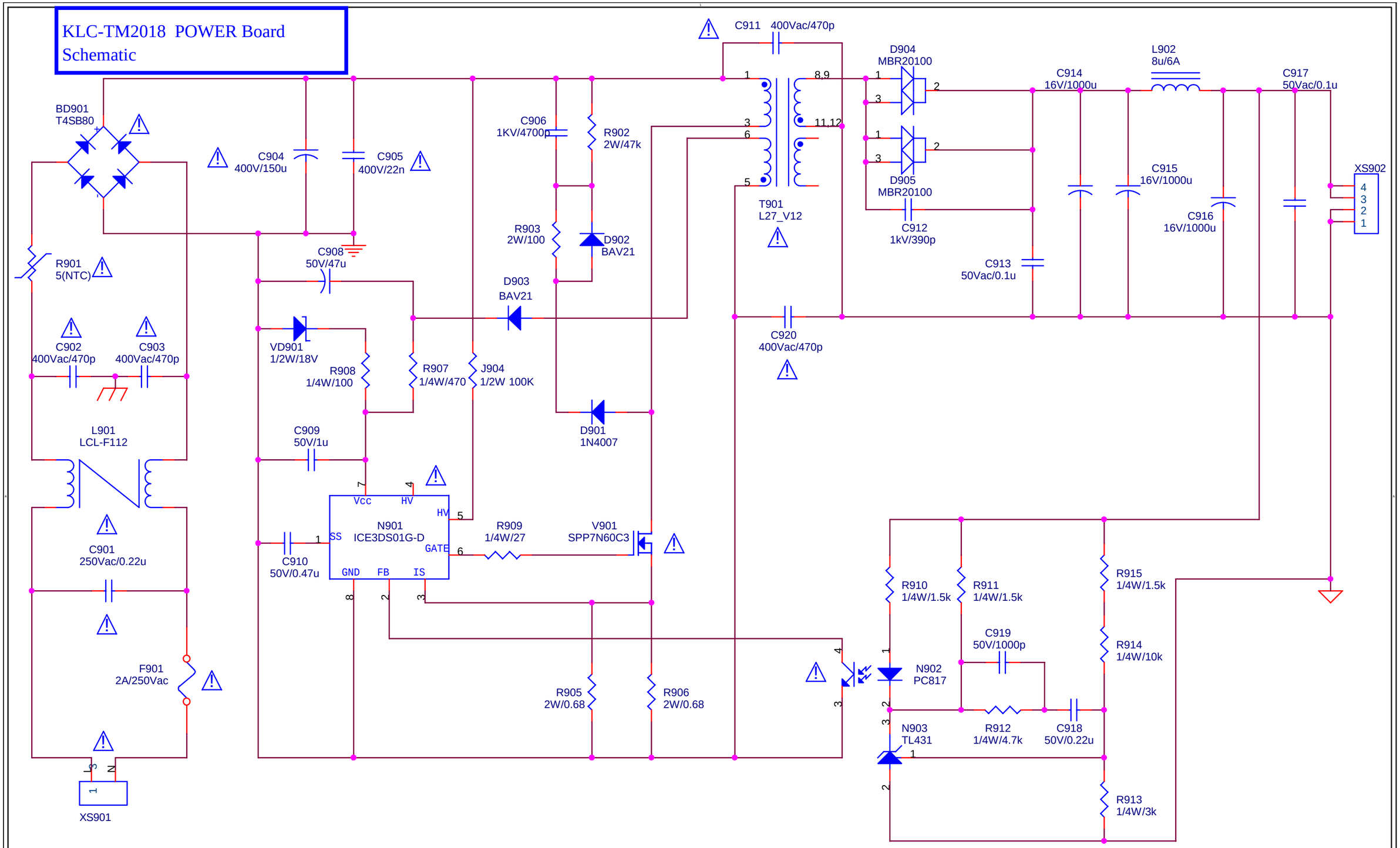

Title	<Title> (power : 35007445)	
Size A4	Document Number <Doc>	Rev 1
Date: Tuesday, March 08, 2005	Sheet 1 of 1	

KLC-TM2018
Panel Convert
Board Schematic

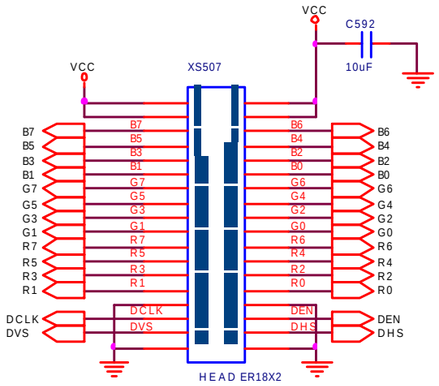

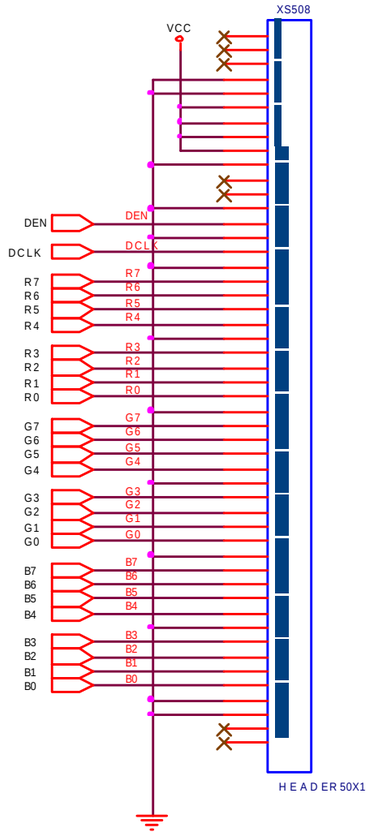

Title	<Title> (screen connect : 35007495)	
Size A3	Document Number <Doc>	Rev <RevCode>
Date: Monday, May 31, 2004	Sheet 1 of 1	

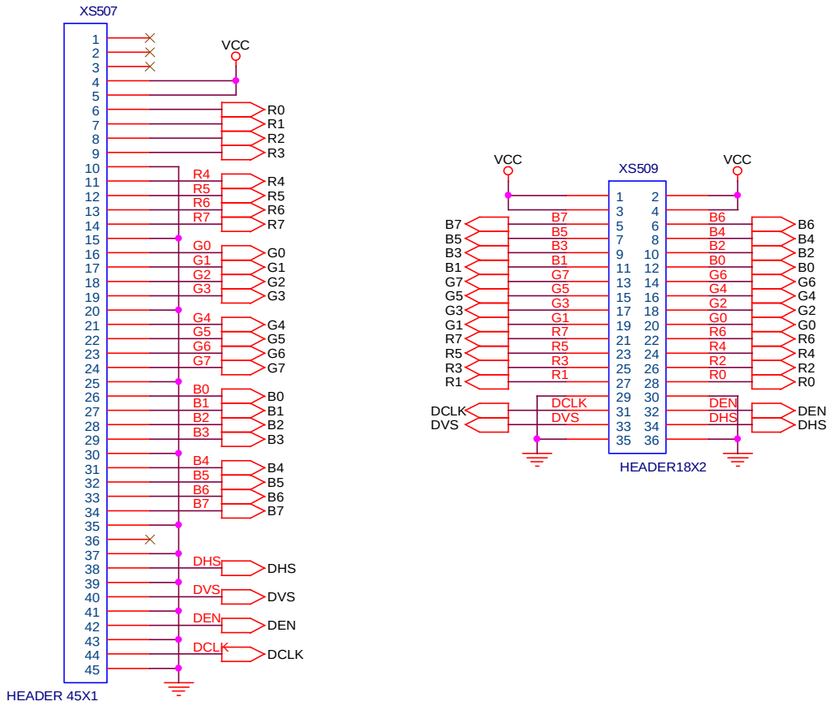

KLC-TM2018
Panel Convert
Board Schematic

Title <Title> (screen connect : 35008225)		
Size A3	Document Number <Doc>	Rev <RevCode>
Date: Wednesday, December 29, 2004	Sheet 1 of 1	

KLC-TM2018
Analog Board Toplayer

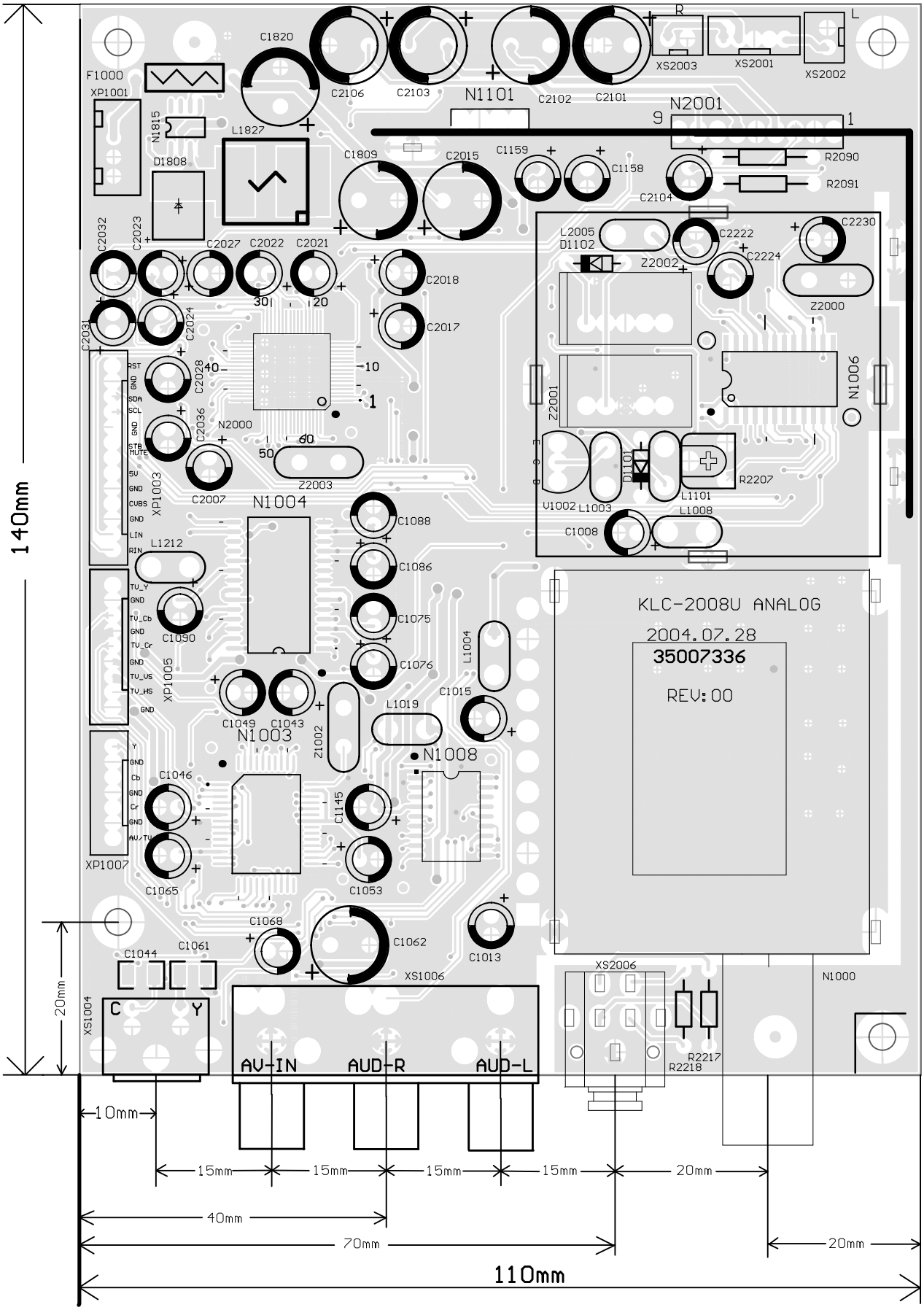

KLC-TM2018
Analog Board Bottom layer

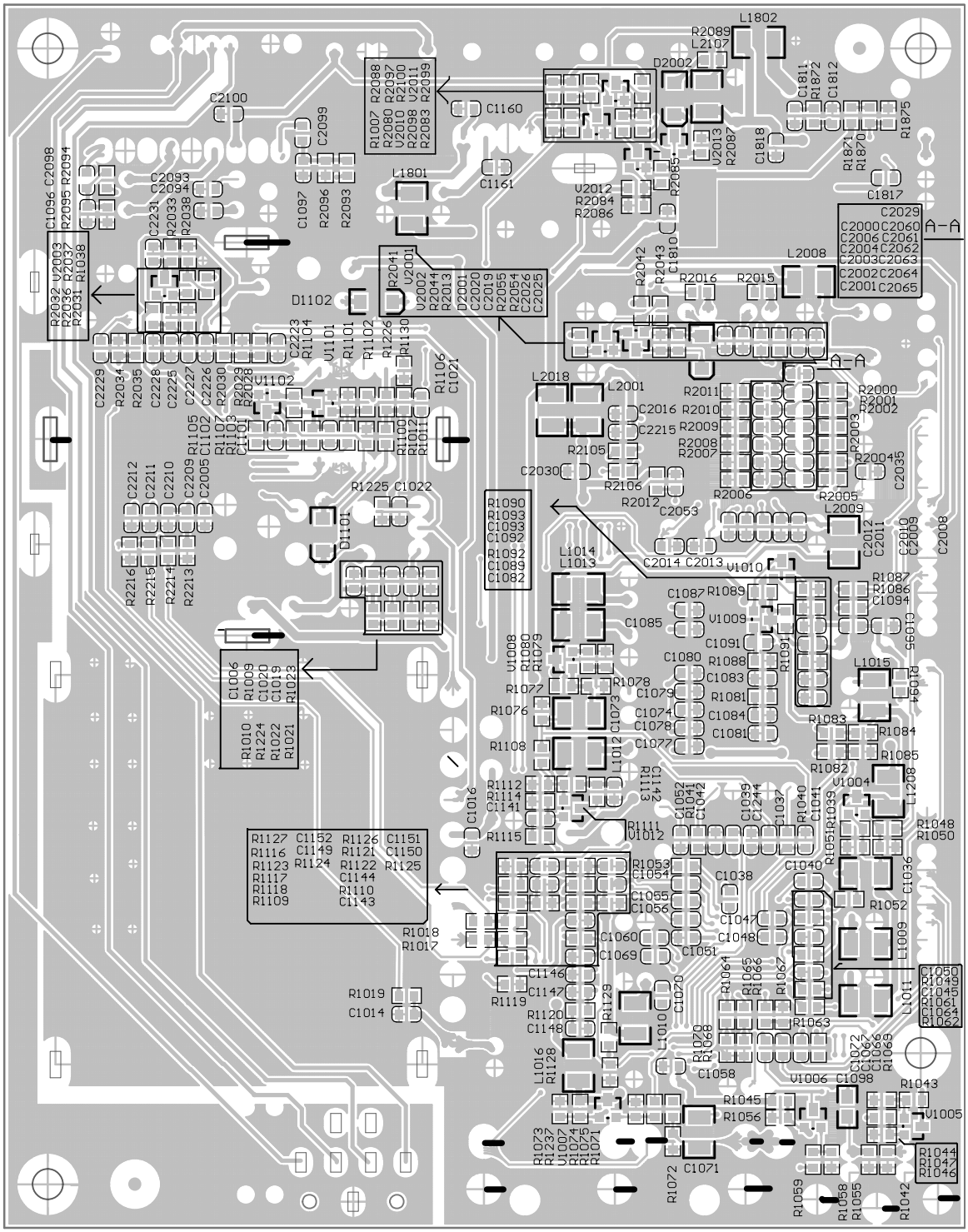

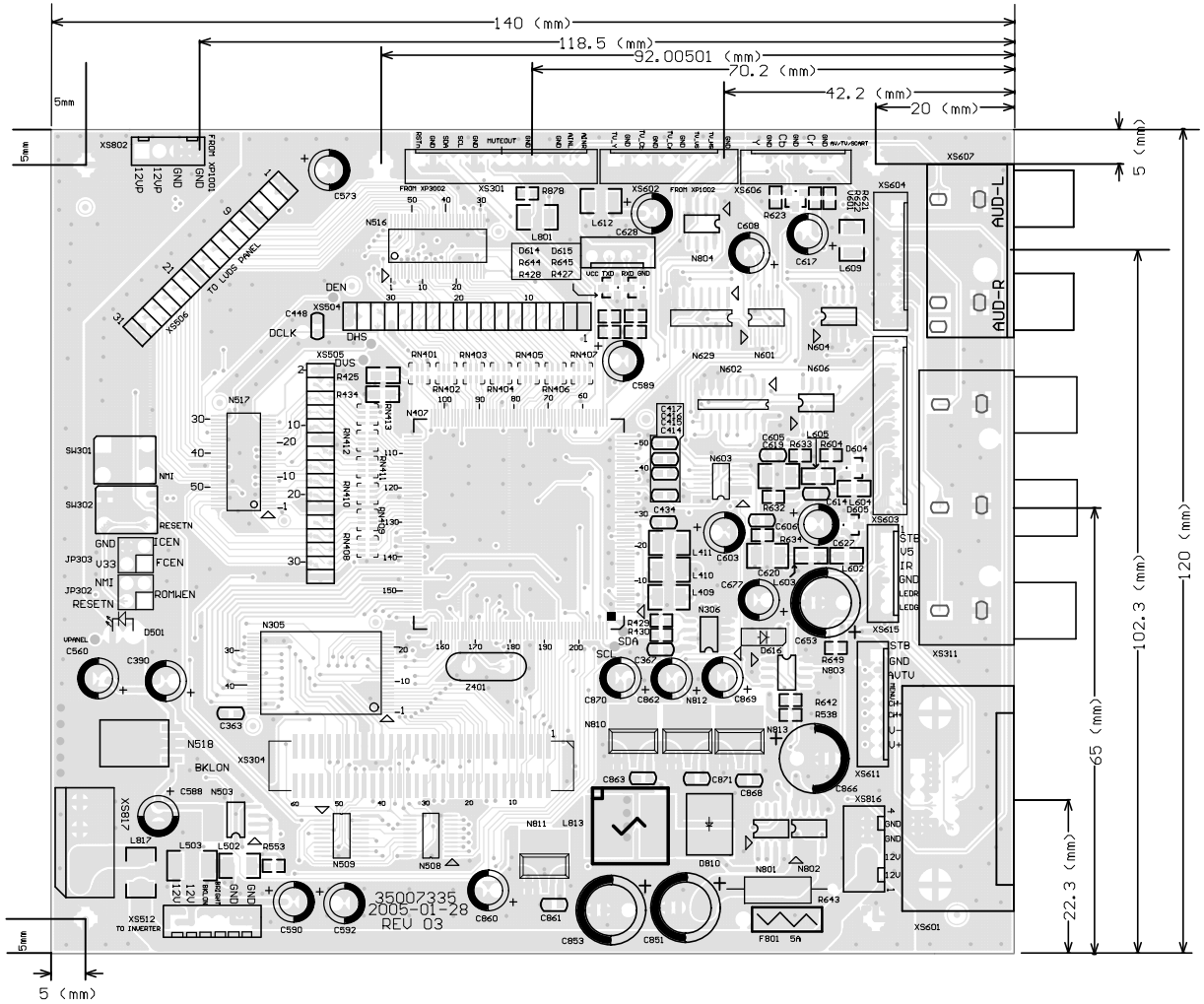

KLC-TM2018
Digital Board
Toplayer
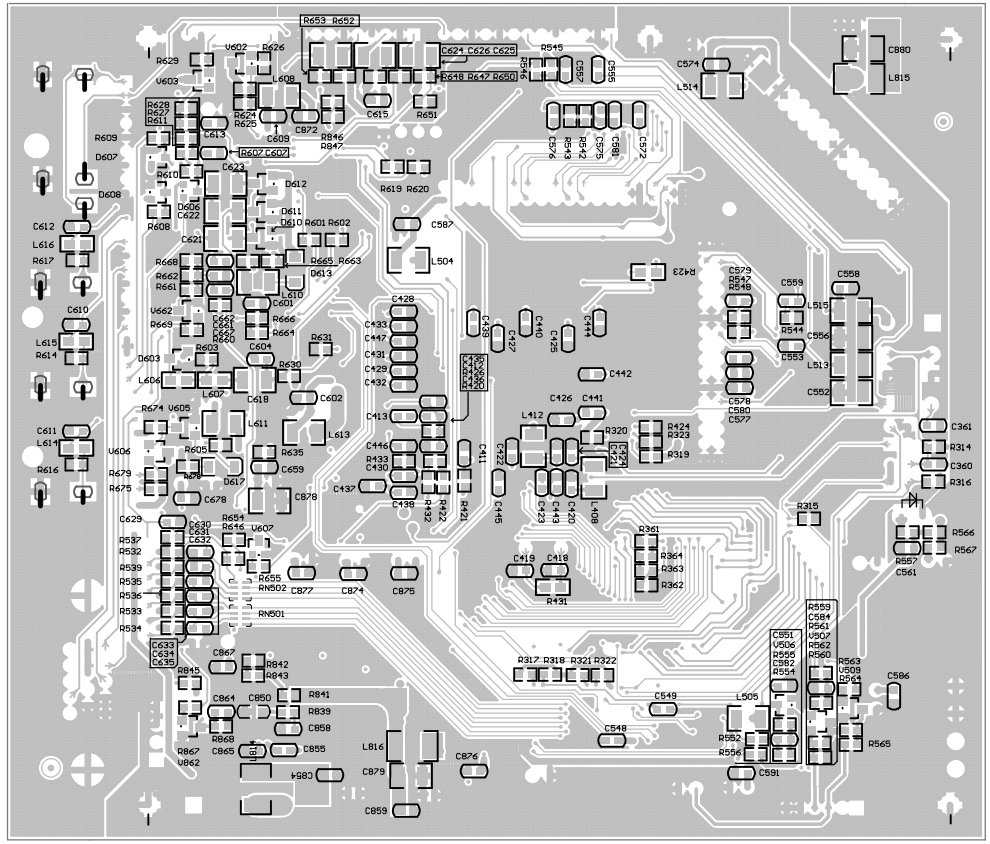
KLC-TM2018
Digital Board
Bottom layer